iMars XD7~10KTL

Quick Installation Guide

INVT Solar Technology (Shenzhen) Co., Ltd.

⚠	● Only qualified electricians are allowed to install the inverter. ● Do not put and install the inverter on or close to combustible materials. ● Install the inverter away from electronic devices with strong electromagnetic interference. ● Keep the installation site away from children and other public places. ● Select an appropriate battery that matches the system, and set the battery type correctly. If you select a battery that does not match the hybrid inverter, the system cannot run. ● If the battery has been completely discharged, please strictly follow the User Manual of the battery to charge the battery. ● Remove any metal jewelry such as ring and bracelet before you perform installation and electrical connection, in order to avoid electric shock ● The input voltage to the inverter must not exceed the maximum input voltage of the inverter, as this may cause damage to the inverter. ● The inverter is not compatible with the positive or negative grounding system of solar cell module. ● Make sure the PE of the inverter is reliably grounded. If the PE is not grounded or not reliably grounded, the inverter cannot operate properly ● Ensure reliable installation and electrical connection of the inverter.

❶ Unpacking Inspection

Before unpacking, carefully check whether the product information indicated on the carton is consistent with that indicated in the Purchase Order, and whether the product package is in good condition. If any problem, contact the supplier as soon as possible

Table 1 Deliverables for Single-phase Hybrid Inverter

No.	Name	Quantity
1	Inverter	1
2	Installation Bracket	1
3	AC Terminal Cover	1
4	Battery Terminal Cover	1
5	Communication Board Cover	1
6	DC Connector (pair)	3
7	Quick installation guide	1
8	Stainless Expansion Bolts M6*50	4
9	M6*16 Combination Bolts	4
10	M6 Nuts	4

11	M6 Flat Washer	4
12	M4*10 Screw	1
13	Output CT	1
14	Parallel Cable	1
15	GND Terminal	1
16	BAT Terminal	2
17	Communication Cable (Optional)	1
18	NTC Cable (Optional)	1
19	GPRS Module (Optional)	1
20	WIFI Module (Optional)	1

Overview

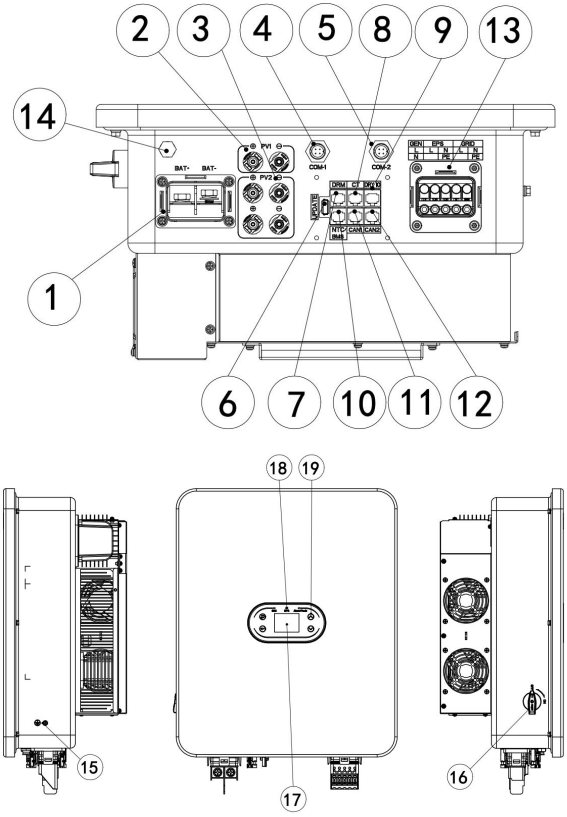

No.	Description	No.	Description
1	PV Input DC Switch	2	PV+ Input Terminal
3	PV- Output Terminal	4	COM-1(RS485/ WiFi/ GPRS communication)
5	COM-2 (Smart Meter RS485 communication)	6	USB Port (Software Upgrade)
7	DRM's RJ45 Interface	8	CT's RJ45 Interface
9	Generator Dry Contact	10	BMS Lithium Battery Communication & NTC
11	CAN1 (Parallel Communication)	12	CAN2 (Parallel Communication)
13	EPS/GRID/GEN Terminal	14	Breather Valve
15	GND Grounding Point	16	PV DC Switch
17	LCD Screen	18	LED Indicator Light
19	Function Keys	/	/

❷ Before Installation

2.1 Location

Select installation site based on the following considerations:

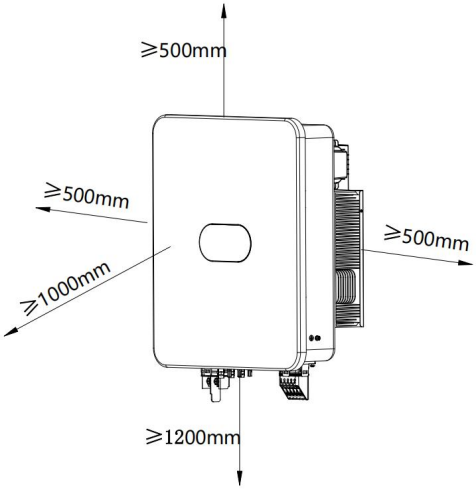

Fig.1 Installation Spacing of Inverter (mm)

(1)The ambient temperature should be between -25℃~60 ℃;

(2)The installation surface should be vertical. Refer to Figure 2.

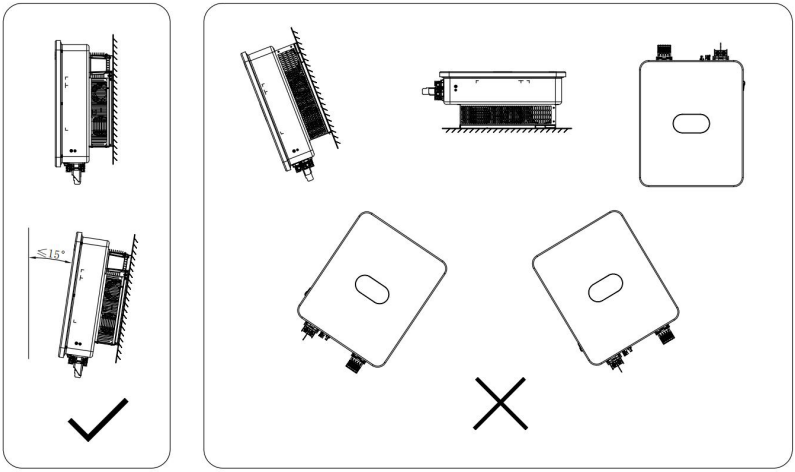

Fig. 2 Installation Location of Inverter

2.2 Cable Specifications

In order to ensure the compatibility of the AC/DC connectors/terminals of the inverter, please always select the following AC/DC wires for the inverter：

Table 2 Cable Specifications

Inverter Model	DC side	AC side
	Recommended minimum wire size(length≤50m)	Recommended minimum wire size(length≤50m)
XD7-10KTL	12AWG	8AWG

❸ Mechanical Installation

The following takes wall mounting as an example. Installation steps of inverter:

(1) Mark the wall with a fixed bracket and note the direction.

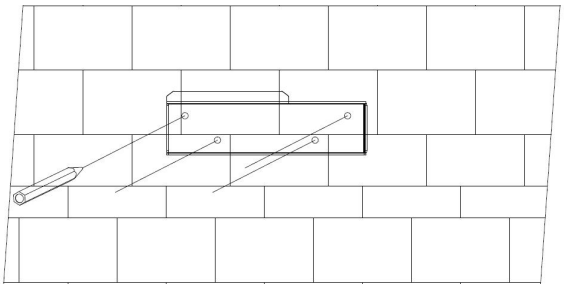

Fig. 3 Fixed support

(2) Use a hammer drill to drill holes and install expansion bolts, using M6*50 stainless steel expansion bolts.

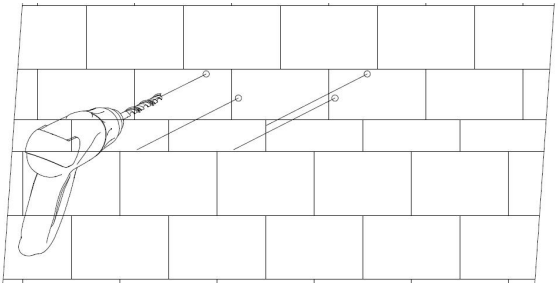

Fig. 4 Installing Expansion Bolts

(3) Fixing the Installation bracket with a tighten torque of 5N•m；

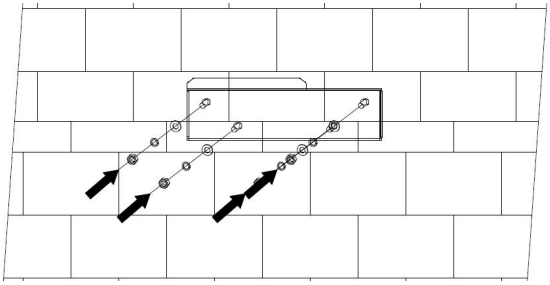

Fig. 5 Fixing and Locking the Wall-mounting Bracket

(4) Align the inverter with the wall-mounting bracket, and then slide it down until it stops to attach the inverter to the wall-mounting brackets firmly，Side M4 screw fixed, torque: 1.2N.m.

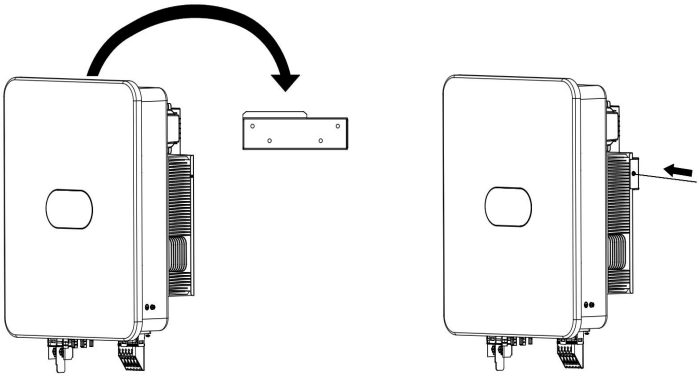

Fig. 6 Attach the Inverter to the Wall-mounting Bracket

❹ Electrical Connection

Note: The following wiring method is appropriate for Australia, New Zealand and South Africa.

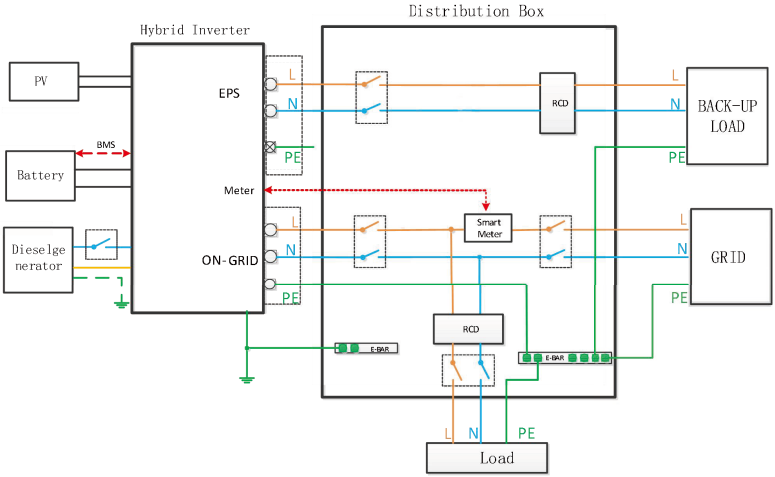

Fig. 7 Electrical Wiring Diagram of Hybrid Inverter

Note: The following wiring method is for regions other than Australia, New Zealand and South Africa.

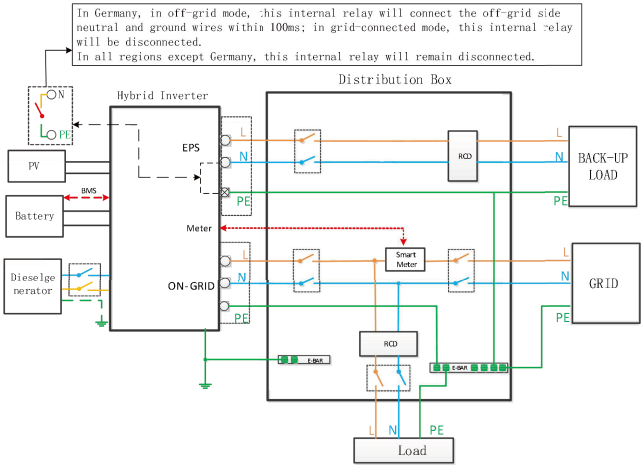

Fig. 8 Electrical Wiring Diagram of Hybrid Inverter

4.1 AC Wiring

The output of single-phase energy storage inverter includes power grid output, EPS

output and GEN output. The connection method is the same, and the identification is used to distinguish. The steps of electrical connection of energy storage inverter are as follows:

(1) Unscrew the rubber nut on the waterproof cover of the hybrid inverter.

(2) Pass the cable through the rubber nut, sealing ring, threaded sleeve and waterproof cover in turn.

(3) Then connect the L, N and PE of the EPS/GRID/GEN cable to the L and N poles and PE corresponding to the screen printing on the AC terminal of the machine, and lock the screws.

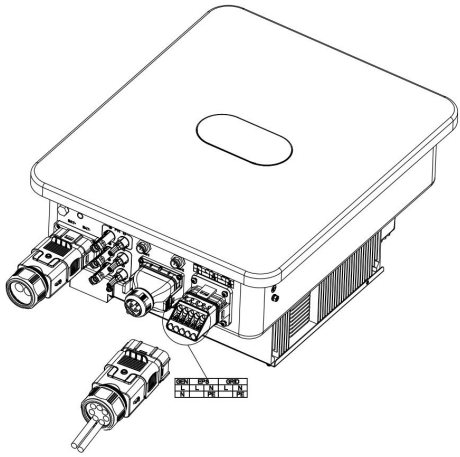

Note: （1）If you use the grid connection function only, connect the power grid to the GRID port of the inverter.

（2）Do not directly connect the GRID port to the EPS port or the generator port, as this could cause damage to the inverter.

（3）Do not connect the EPS port to the grid or generator, as this could cause damage to the inverter.

（4）The wire gauge for the power connections to the GRID, EPS, and generator ports should be ≥8.4 mm² (8AWG).

4.2 PV Wiring

(1) Check if the connection polarity of the photovoltaic string is correct, and ensure that the voltage of each string is within the allowable range of the inverter.

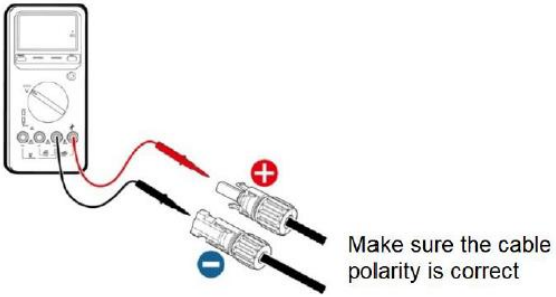

(2) Insert the positive and negative connector into the input terminal at the bottom of the inverter and lock it in place.

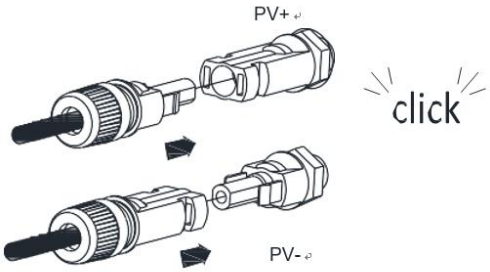

4.3 BAT Wiring

Install the battery cable in the following steps:

(1) Unscrew the rubber nut on the waterproof cover of the hybrid inverter.

(2) Pass the cable through the rubber nut, sealing ring, threaded sleeve and waterproof cover in turn.

(3) Crimp the battery cable supplied in the package to the corresponding O-terminal.

(4) Connect the positive (negative) terminal of the battery to the positive (negative) end of the battery terminal of the inverter.

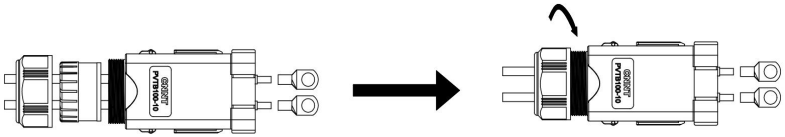

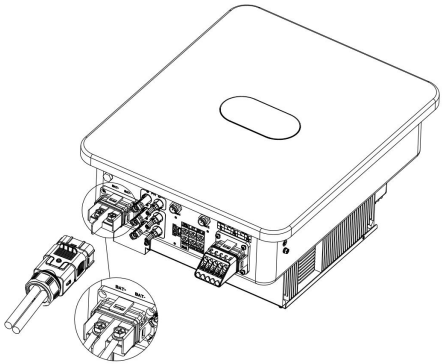

Note: (1) A DC switch is required between the battery and the inverter.

(2) The length of the power line connecting the battery and the inverter should be ≤1.5m, with a diameter ≥35mm^2 (2AWG).

4.4 Communication Connection

4.4.1 To use a lithium battery, you need to connect the BMS system of the lithium battery in the following steps:

(1) Unscrew the rubber nut on the waterproof cover of the hybrid inverter.

(2) Pass the LAN cable through the rubber nut, sealing ring, threaded sleeve and waterproof cover in turn,

(3) Connect the RJ45 terminal of the LAN cable to the BMS port of the hybrid inverter,

(4) Lock the waterproof cover with screws;

(5) Screw the rubber nut reliably onto the waterproof cover.

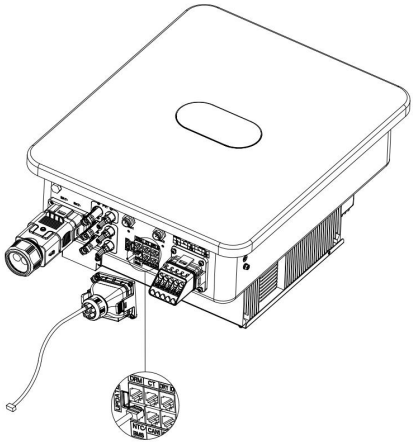

Note: If you are using a lead-acid battery or a lithium battery that does not support BMS communication, there is no need to connect the BMS communication cable. You can directly proceed to connect the lead-acid battery

4.4.2 With a lead-acid battery, you need to connect a temperature sensor to monitor the ambient temperature of the battery. Connect the temperature sensor in the following steps:

(1) Unscrew the rubber nut on the waterproof cover of the hybrid inverter.

(2) Pass the NTC cable through the rubber nut, sealing ring, threaded sleeve and waterproof cover in turn.

(3) Connect the RJ45 terminal of the LAN cable to the BMS port of the hybrid inverter

(4) Lock the waterproof cover with screws;

(5) Screw the rubber nut reliably onto the waterproof cover.

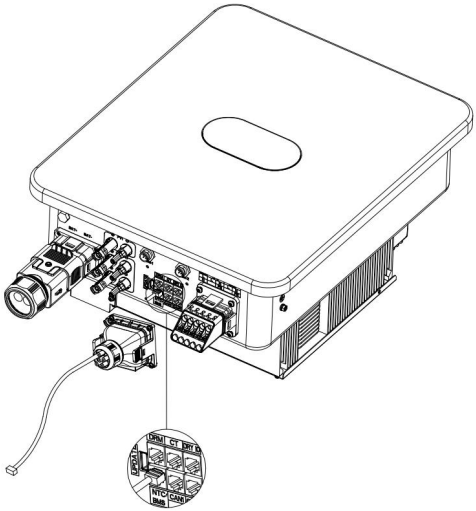

Note: The probe of the temperature sensor used to monitor the ambient temperature of the lead-acid battery should be shorter than 1.5m. If you use lithium battery instead, there is no need to install a temperature sensor.

When all communication cables have been installed, push the waterproof cover into the bottom, tighten the screws that fix the frame, and finally lock the waterproof cover.

❺ Operation

5.1 Inspection before Operation

Check as follows before operation:

(1) Check whether the voltage of the PV strings is in the allowable input voltage range of the inverter or not.

(2) Check whether the voltage of the AC side is normal or not.

(3) Check whether the battery connection is correct and the battery voltage is normal.

(4) Check whether the inverter is grounded properly or not.

(5) Ensure all switches are “Off”.

(6) Ensure all electrical safety precautions are clearly identified on the installation site.

(7) Ensure the communication module is correctly connected.

5.2 Grid-tied Operation

Perform the following steps to start the inverter and complete the grid-connected operation of the inverter:

(1) Turn on the PV switch.

(2) Turn on the switch between the g时d and the hybrid inverter.

(3) Turn on the switch between the battery and the hybrid inverter to wake up the battery.

(4) If you need to set the hybrid inverter, read the User Manual of the hybrid inverter for more instructions.

(5) The shutdown procedure is in the reverse order of the above.

LED Indications of Hybrid Inverter

The user can read more information via the buttons. The LED indications are explained below.

Solid red	Failure
Solid green	Normal working
Flashing in green	Countdown of grid connection
Solid yellow	Grid disconnected
Flashing in yellow and green	Program burning

5.3 Accessories and Wiring

485 pins definition

1 (red)	+5VDC
2 (orange)	A (RS485+)
3 (brown)	B (RS485-)
4 (black)	GND

Comm. Optional accessories

Comm. Optional accessories	Inverter port	CPU port
Ethernet converter	RS485-M	RS485 signal
WiFi converter	RS485-M	WiFi signal
GPRS converter	RS485-M	GPRS signal

5.4 Maintenance

When power-off maintenance, overhaul, troubleshooting of the inverter is required, please stop the inverter strictly as follows:

(1) Shut down via the LCD screen setting.

(2) Disconnect the inverter's AC switch for the public power grid.

(3) Disconnect the DC switch integrated on the inverter.

(4) Contact our customer service staff or local distributors.

More information
For complete instruction of relevant parameters, please refer to Operation Manual of INVT iMars Series Solar Inverters. You can visit www.invt.com or scan the QR code to download it. Service line: +86 400 700 9997

INVT Solar Technology (Shenzhen) Co., Ltd.

Certificate of Quality

Quality Inspector: OQA03 PASS

The product is tested by our quality control and quality assurance department, is in line with the product standards and specified technical requirements and is ready to be shipped.

Warranty Card

Customer Name：		
Customer Address：		
Contact Person：	Tel/Phone：	
Product Model Number：	Factory Serial Number：	
Purchase Date：	Fault Date：	
Open Circuit Voltage (Voc) / DC Input Power (W):	Grid Rated Voltage / Frequency :	
Setup Model ☐ Independent ☐ Parallel	Noise ? ☐ YES ☐ NO	Smoke ? ☐ YES ☐ NO

Inverter Software Version: Version 1_____; Version 2_____

MCU Version:

Error Code:

Error Description:

Please return this card with information to us. Thank you!

All rights reserved by INVT counterfeiting must be prosecuted.
Information may be subject to change without notice during
product improving

66001-01572

V1.1