GD100-PV Series

Solar Pump Controller

Management Service

invt

- Effective protection function, including PV over-voltage protection, PV polarity reverse warning, auto derating against over-temperature, etc.
- Advanced MPPT algorithms: solar power tracking efficiency reaches 99%.
- Support GPRS module, which can remote monitor the controller by using the APP.
- Automatically start or sleep only after being connected to solar panel without any parameter setting.
- Optional boost module for 2.2kW and below, to make the pump work in low voltage and reduce the cost.
- Optional cabinet product for IP54 protection level.

Applications

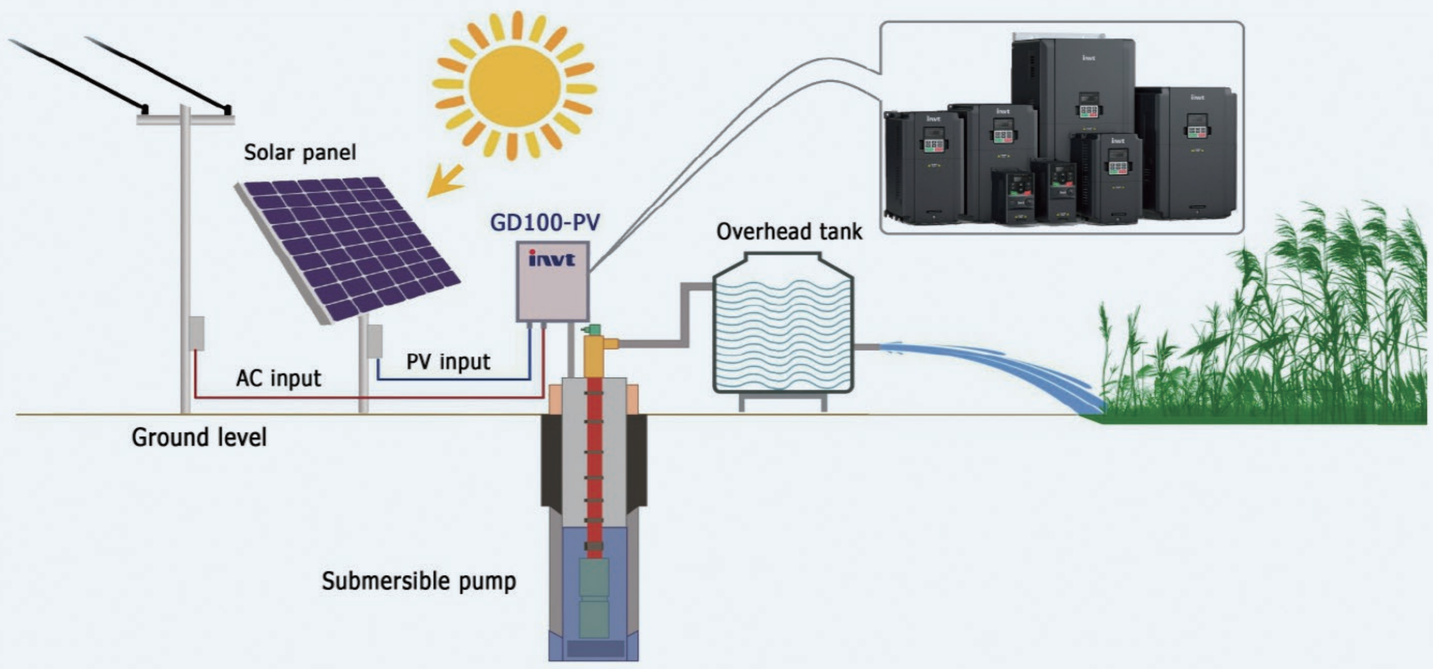

Application system

Type Selection

GD100 – 5R5G – 4 5 – PV
① ② ③ ④ ⑤

No.	Sign	Description	Remarks
①	GD100	Product abbreviation	GD100 is short for Goodrive100.
②	5R5	Power range + Load type	5R5: 5.5kW G: Constant torque load.
③	4	Voltage degree	4: AC 3PH 380V (-15%)–440(+10%) 2: AC 3PH 220V (-15%)–240(+10%) S2: AC 1PH 220V (-15%)–240(+10%) SS2: AC 1PH input/output 220V (-15%)–240(+10%)
④	5	Protection level	5: IP54 Standard controller is IP20, not displayed.
⑤	PV	Industrial code	PV stands for solar pump.

Power Ratings

Series	Model	Rated output power		Rated input current (A)	Rated output current (A)
		kW	Hp		
1PH 220 Input 1PH 220V Output	GD100-0R4G-SS2-PV	0.4	0.5	6.5	4.2
	GD100-0R7G-SS2-PV	0.75	1	9.3	7.2
	GD100-1R5G-SS2-PV	1.5	2	15.7	10.2
	GD100-2R2G-SS2-PV	2.2	3	24	14
1PH 220V	GD100-0R4G-S2-PV	0.4	0.5	6.5	2.5
	GD100-0R7G-S2-PV	0.75	1	9.3	4.2
	GD100-1R5G-S2-PV	1.5	2	15.7	7.5
	GD100-2R2G-S2-PV	2.2	3	24	10
3PH 220V	GD100-1R5G-2-PV	1.5	2	7.7	7.5
	GD100-2R2G-2-PV	2.2	3	12	10
	GD100-004G-2-PV	4	5.5	17	16
	GD100-5R5G-2-PV	5.5	7.5	25	20
	GD100-7R5G-2-PV	7.5	10	33	30
3PH 380V	GD100-0R7G-4-PV	0.75	1	3.4	2.5
	GD100-1R5G-4-PV	1.5	2	5	4.2
	GD100-2R2G-4-PV	2.2	3	5.8	5.5
	GD100-004G-4-PV	4	5.5	13.5	9.5
	GD100-5R5G-4-PV	5.5	7.5	19.5	14
	GD100-7R5G-4-PV	7.5	10	25	18.5
	GD100-011G-4-PV	11	15	32	25
	GD100-015G-4-PV	15	20	40	32
	GD100-018G-4-PV	18.5	25	47	38
	GD100-022G-4-PV	22	30	56	45
	GD100-030G-4-PV	30	41	70	60
	GD100-037G-4-PV	37	50	80	75
	GD100-045G-4-PV	45	61	90	92
	GD100-055G-4-PV	55	73	105	115
	GD100-075G-4-PV	75	100	139	150
	GD100-090G-4-PV	90	120	168	180
	GD100-110G-4-PV	110	147	201	215
	GD100-132G-4-PV	132	177	265	260
	GD100-160G-4-PV	160	214	310	305
	GD100-185G-4-PV	185	248	345	340
	GD100-200G-4-PV	200	268	385	380
	GD100-220G-4-PV	220	299	430	425
	GD100-250G-4-PV	250	340	485	480
	GD100-280G-4-PV	280	381	545	530
	GD100-315G-4-PV	315	428	610	600
	GD100-355G-4-PV	355	482	625	650
	GD100-400G-4-PV	400	544	715	720
	GD100-450G-4-PV	450	612	840	820
	GD100-500G-4-PV	500	680	890	860

Product specification

Model	-SS2	-S2	-2	-4	
AC input voltage (V)	220(-15%) ~240(+10%) (1PH)		220(-15%) ~240 (+10%) (3PH)	380(-15%) ~440 (+10%) (3PH)	380(-15%) ~440 (+10%) (3PH)
Max. DC input voltage (V)	440	440	440	800	900
Start-up voltage (V)	200	200	200	300	300
Lowest working voltage (V)	150	150	150	250	250
Recommended DC input voltage range (V)	200~400	200~400	200~400	300~750	300~850
Recommended MPP voltage (V)	330	330	330	550	550
Rated output voltage (V)	220 (1PH)	220 (3PH)	220 (3PH)	380 (3PH)	380 (3PH)
Output frequency range (Hz)	0~400				
MPPT	99%				
Installation method	Wall mounting/Rail mounting/Flange installation.				
Environment parameters	-10°C~+50°C. If above 40℃, derate 2% for every additional 1℃.				
Altitude	Below 1000m. IF above 1000m, derate 1% every additional 100m.				
Cooling manner	Fan cooling				
Protection level	IP20 ; IP54 (Cabinet)				

Options

Recommended configuration for solar pumping controllers with the boost module

PP100-3R2-PV + Solar pumping controller	Max. DC input current	Open-circuit voltage degree of solar module			
		Voc=45±1Vdc		Voc=49±1Vdc	
	(A)	Module power±5Wp	Modules per string * strings	Module power±5Wp	Modules per string * strings
GD100-0R4G-SS2-PV	12	300	3*1	540	2*1
GD100-0R7G-SS2-PV	12	300	4*1	540	3*1
GD100-1R5G-SS2-PV	12	300	7*1	540	5*1
GD100-0R4G-S2-PV	12	300	3*1	540	2*1
GD100-0R7G-S2-PV	12	300	4*1	540	3*1
GD100-1R5G-S2-PV	12	300	7*1	540	5*1
GD100-0R7G-4-PV	12	300	4*1	540	3*1
GD100-1R5G-4-PV	12	300	7*1	540	5*1
GD100-2R2G-4-PV	12	300	11*1	540	7*1

Boost module

0.4-2.2kW models can be configured with the boost module, which can improve the utilization of the solar component.

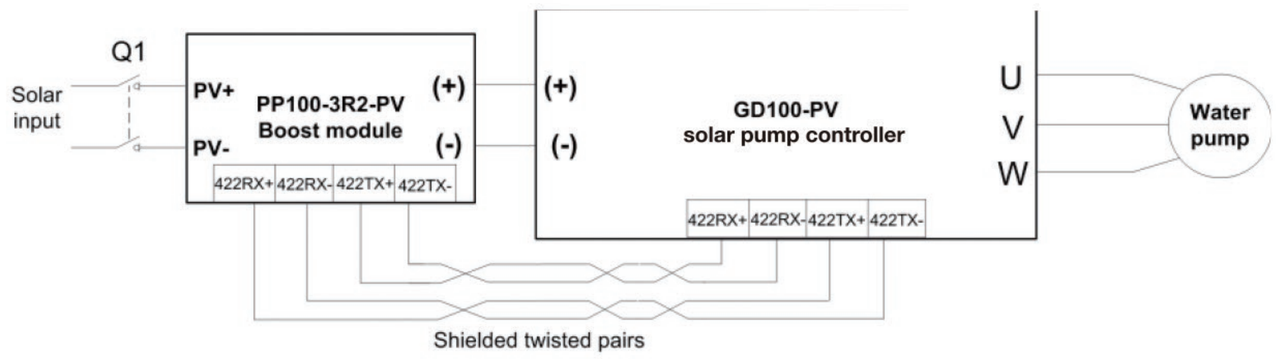

Connection between the boost module and solar pumping controller

Model	PP100-3R2-PV
Input	
Max. input power (W)	3200
Max. DC voltage (V)	600
Start-up voltage (V)	80
Min. working voltage (V)	70
Max. input current (A)	12
Output	
Output voltage (V)	350/570 (automatically deter mined by the controller)

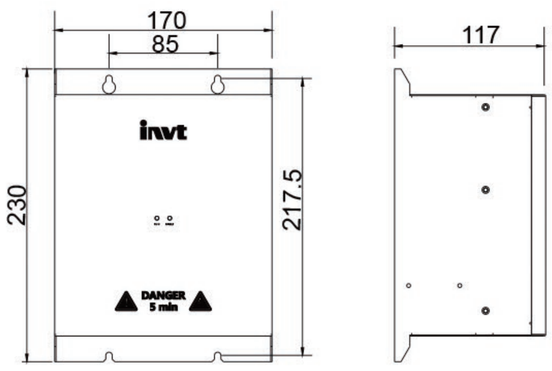

Installation dimension

GPRS module and monitoring APP

GD100-PV series support the installation of the GPRS module to implement remote monitoring. The controller operation state can be monitored on the APP in the mobile phone or web page ineral time.

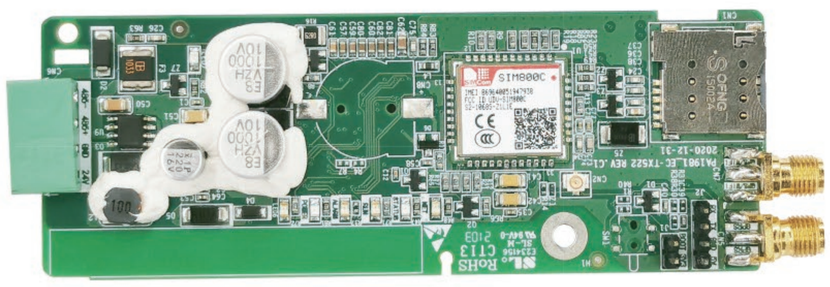

GPRS module

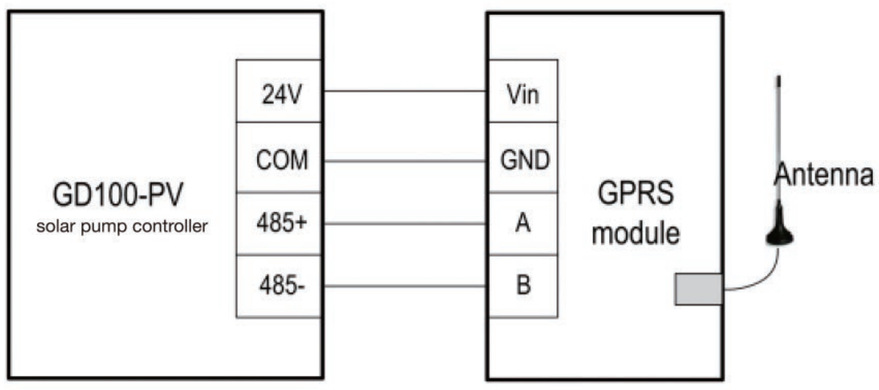

Diagram of connection the GPRS module to the controller

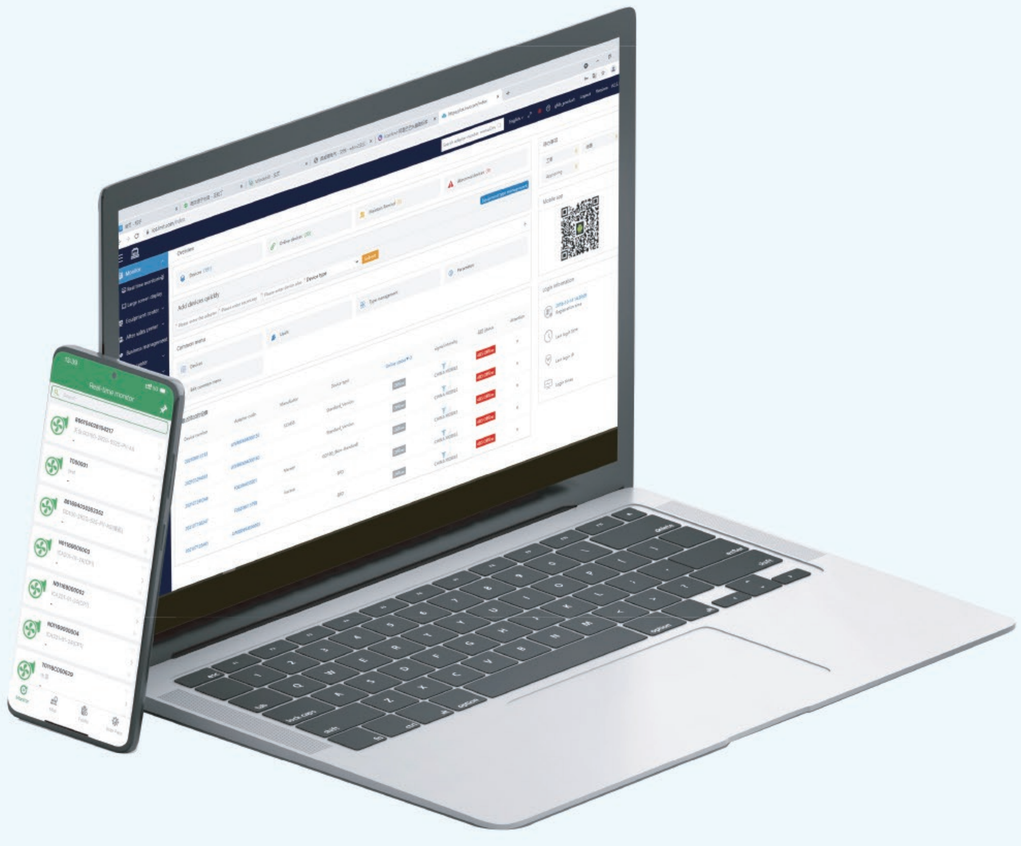

The web page of IOT monitoring system for GD100-PV is: iot.invt.com:12000, and you can download the android APP by sweep the QR-Code.

Solution for Auto Switch

Solution Introduction

Generally, controllers do not allow simultaneous connection of PV and grid input. If such simultaneous connection is r external configuration must be made to switch the control circuit. One solution for auto switch is recommended:

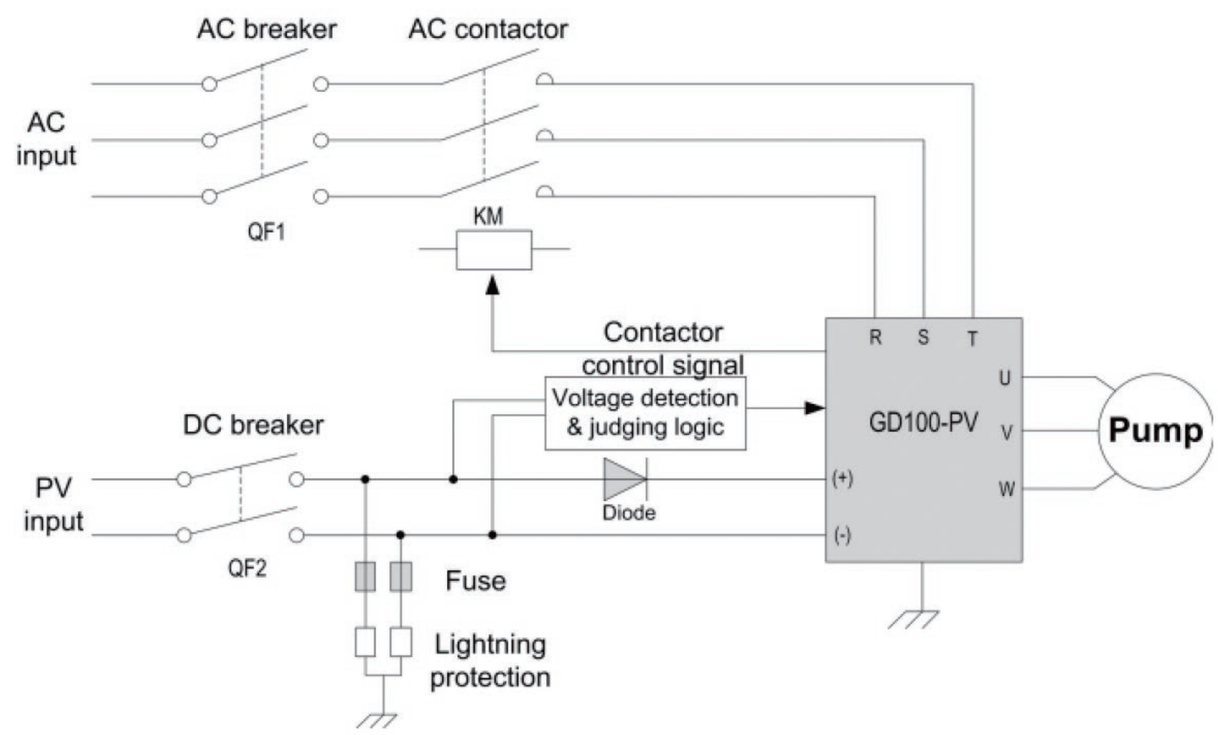

Model selection reference for low-voltage apparatus

Model	AC breaker (A)	DC breaker (A)	AC contactor (A)	Surge protection	Fuse	Diode
GD100-0R4G-SS25-PV-AS	16	16A/500V	16	Type II 1000VCC	30A	Not required since equipped the boost module
GD100-0R7G-SS25-PV-AS	25		25			
GD100-1R5G-SS25-PV-AS	40		32			
GD100-2R2G-SS25-PV-AS	40		32			
GD100-0R4G-S25-PV-AS	16		10			
GD100-0R7G-S25-PV-AS	16		16			
GD100-1R5G-S25-PV-AS	25		25			
GD100-2R2G-S25-PV-AS	40		32			
GD100-0R7G-45-PV-AS	10	16A/1000V	10			
GD100-1R5G-45-PV-AS	10		10			
GD100-2R2G-45-PV-AS	16		10			
GD100-004G-45-PV-AS	25	63A/1000V	16			55A/1600V
GD100-5R5G-45-PV-AS	25		16			
GD100-004G-25-PV-AS	25		16			
GD100-7R5G-45-PV-AS	40		25			
GD100-5R5G-25-PV-AS	40		25			
GD100-011G-45-PV-AS	63		32			
GD100-7R5G-25-PV-AS	63	80A/1000V	32			
GD100-015G-45-PV-AS	63		50			
GD100-018G-45-PV-AS	100	125A/1000V	63			110A/1600V
GD100-022G-45-PV-AS	100		80			
GD100-030G-45-PV-AS	125		95			
GD100-037G-45-PV-AS	160		120			

Note:
Above 37kW of IP54 model please refer operation manual page 57-58.

Solar Pumping Controller of IP54

For the application of auto switch between PV and grid input,, INVT provides two types of controllers for IP54 protection level: the controller with or without the auto switch function.

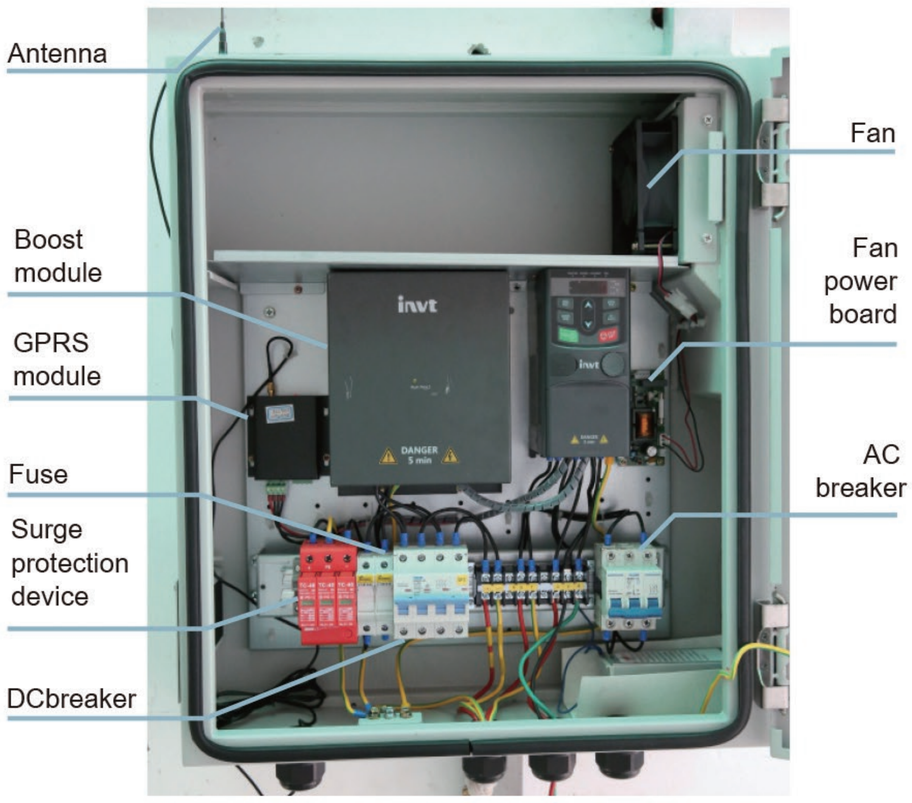

Internal structure of GD100-2R2G-S25-PV-AS

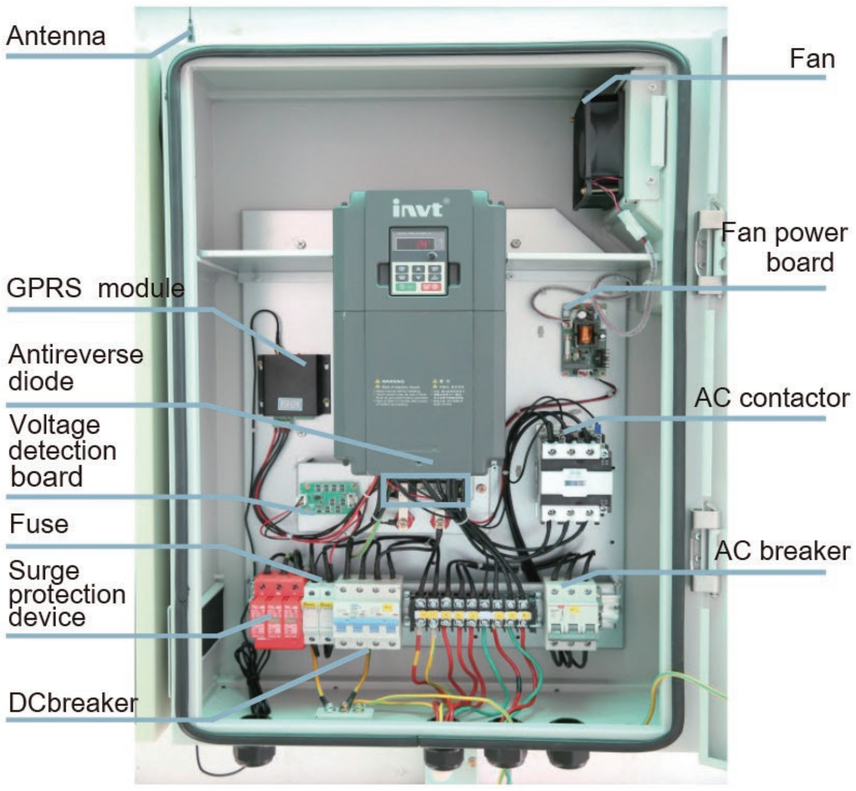

Internal structure of GD100-015G-45-PV-AS

Note:

1. The solar pump controllers of IP54 without the auto switch function do not have the suffix -AS.
2. The solar pump controllers of IP54 with the rated power equal to or less than 2.2kW are equipped with the boost module, supporting auto switch.

Reactors

VFD model	Output reactor	VFD model	Output reactor
GD100 -1R5G -2-PV	OCL2 -004 -4	GD100 -045G -4-PV	OCL2 -045 -4
GD100 -2R2G -2-PV	OCL2 -004 -4	GD100 055G 4 PV	OCL2 -055 4
GD100 -004G -2-PV	OCL2 -5R5 4	GD100 -075G -4-PV	OCL2 -075 -4
GD100 -5R5G -2-PV	OCL2 -7R5 -4	GD100 -090G -4-PV	OCL2 -110 -4
GD100 7R5G 2 PV	OCL2 -015 -4	GD100 -110G -4-PV	OCL2 -110 -4
GD100 -0R7G -4-PV	OCL2 -1R5 -4	GD100 -132G -4-PV	OCL2 -160 -4
GD100 -1R5G -4-PV	OCL2 -1R5 4	GD100 -160G -4-PV	OCL2 -200 -4
GD100 -2R2G -4-PV	OCL2 -2R2 -4	GD100-185G-4-PV	OCL2-200 4
GD100 -004G -4-PV	OCL2 -004 -4	GD100-200G-4-PV	OCL2-200-4
GD100 -5R5G -4-PV	OCL2 -5R5 4	GD100-220G-4-PV	OCL2-280-4
GD100 -7R5G -4-PV	OCL2 -7R5 -4	GD100-250G-4-PV	OCL2-280-4
GD100 -011G-4-PV	OCL2 - 011 4	GD100-280G-4-PV	OCL2-350 4
GD100 -015G -4-PV	OCL2 -015 -4	GD100-315G-4-PV	OCL2-350-4
GD100-018G-4-PV	OCL2-018-4	GD100-355G-4-PV	OCL2-400-4
GD100-022G-4-PV	OCL2-022-4	GD100-400G-4-PV	/
GD100-030G-4-PV	OCL2-030-4	GD100-450G-4-PV	/
GD100-037G-4-PV	OCL2-037-4	GD100-500G-4-PV	/

Note:
If the distance between the inverter and motor is more than 50 m, select the reactor according to the following table.

Recommended Solar Array Configuration

Recommended configuration in standard condition

Model	Open-circuit voltage degree of solar module			
	Voc=45±1Vdc		Voc=49±1Vdc	
	Panel Power (W)	Configuration (Per string*strings)	Panel Power (W)	Configuration (Per string*strings)
GD100-0R4G-SS2-PV	300	9*1	540	8*1
GD100-0R7G-SS2-PV	300	9*1	540	8*1
GD100-1R5G-SS2-PV	300	9*1	540	8*1
GD100-2R2G-SS2-PV	300	9*1	540	8*1
GD100-0R4G-S2-PV	300	9*1	540	8*1
GD100-0R7G-S2-PV	300	9*1	540	8*1
GD100-1R5G-S2-PV	300	9*1	540	8*1
GD100-2R2G-S2-PV	300	9*1	540	8*1
GD100-1R5G-2-PV	300	9*1	540	8*1
GD100-2R2G-2-PV	300	9*1	540	8*1
GD100-004G-2-PV	300	9*2	540	9*1
GD100-5R5G-2-PV	300	9*3	540	8*2
GD100-7R5G-2-PV	300	9*4	540	9*2
GD100-0R7G-4-PV	300	15*1	540	14*1
GD100-1R5G-4-PV	300	15*1	540	14*1
GD100-2R2G-4-PV	300	15*1	540	14*1
GD100-004G-4-PV	300	16*1	540	14*1
GD100-5R5G-4-PV	300	15*2	540	14*1
GD100-7R5G-4-PV	300	15*2	540	16*1
GD100-011G-4-PV	300	15*3	540	14*2
GD100-015G-4-PV	300	15*4	540	16*2
GD100-018G-4-PV	300	15*5	540	14*3
GD100-022G-4-PV	300	15*6	540	14*4
GD100-030G-4-PV	300	15*8	540	15*5
GD100-037G-4-PV	300	15*9	540	15*6
GD100-045G-4-PV	300	15*11	540	16*7
GD100-055G-4-PV	300	15*14	540	15*9
GD100-075G-4-PV	300	15*19	540	14*13
GD100-090G-4-PV	300	15*22	540	15*14
GD100-110G-4-PV	300	15*27	540	15*18
GD100-132G-4-PV	300	15*38	540	15*21
GD100-160G-4-PV	300	15*46	540	15*26
GD100-185G-4-PV	300	15*53	540	15*30
GD100-200G-4-PV	300	15*57	540	15*32
GD100-220G-4-PV	300	15*36	540	15*63
GD100-250G-4-PV	300	15*40	540	15*72
GD100-280G-4-PV	300	15*45	540	15*80
GD100-315G-4-PV	300	15*50	540	15*91
GD100-355G-4-PV	300	15*57	540	15*102
GD100-400G-4-PV	300	15*64	540	15*155
GD100-450G-4-PV	300	15*72	540	15*130
GD100-500G-4-PV	300	15*80	540	15*144

System Wiring Diagram

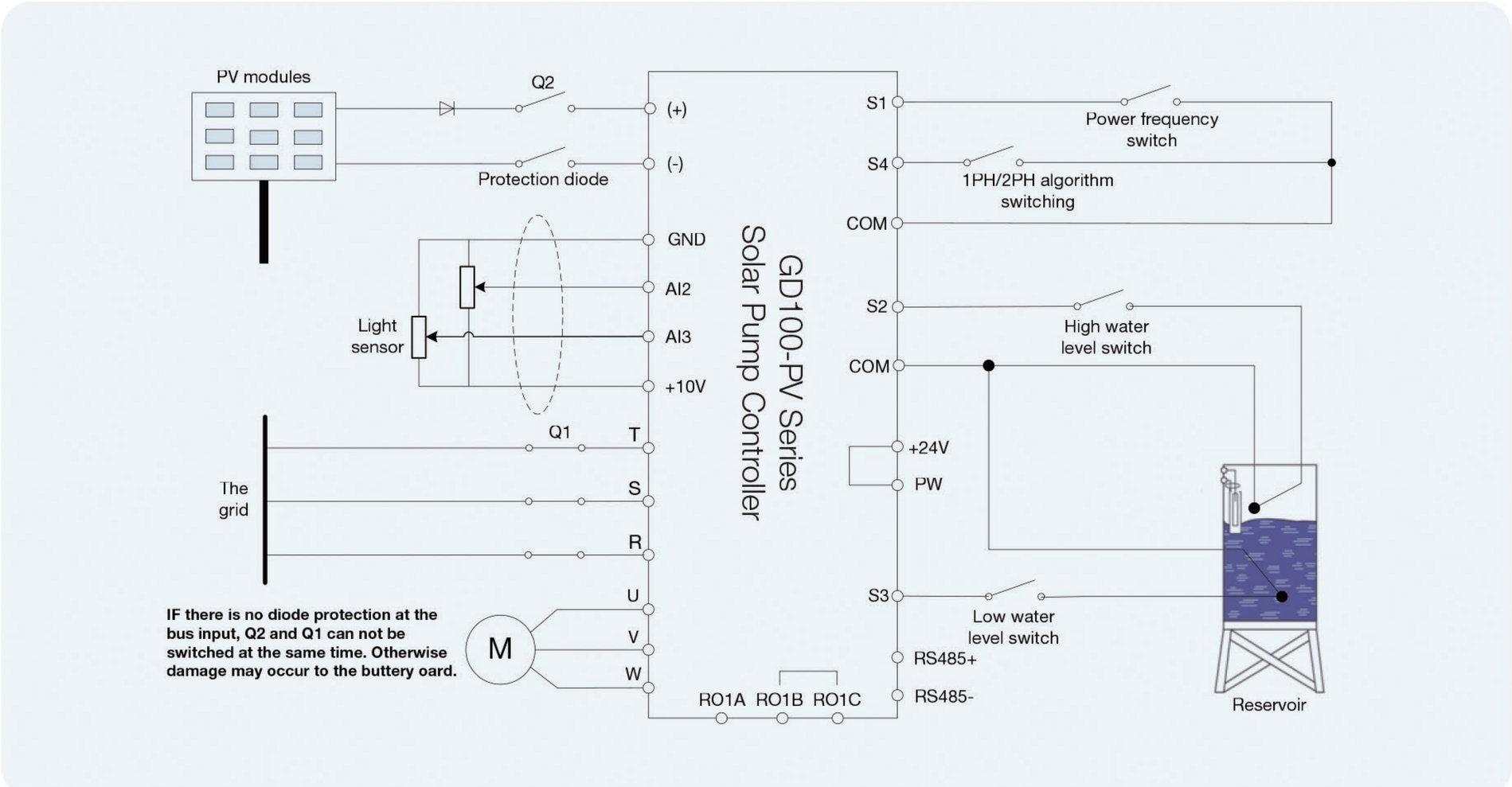

Installation Dimensions

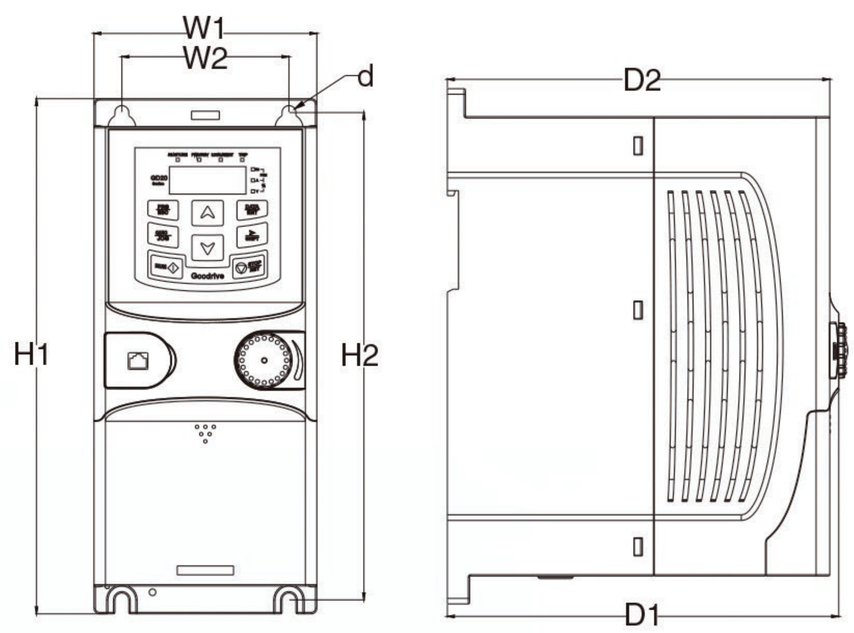

Wall mounting for models below 2.2kW

(unit: mm)

Voltage level	VFD model	W1	W2	H1	H2	D1	D2	Installation hole diameter (d)
1PH 220V	0.4-0.75kW	80.0	60.0	160.0	150.0	123.5	120.3	Ø 5
1PH 220V in 1PH 220V out	0.4kW	80.0	60.0	160.0	150.0	123.5	120.3	Ø 5
1PH 220V	1.5-2.2kW	80.0	60.0	185.0	175.0	140.5	137.3	Ø 5
1PH 220V in 1PH 220V out	0.75-2.2kW	80.0	60.0	185.0	175.0	140.5	137.3	Ø 5
3PH 380V	0.75-2.2kW	80.0	60.0	185.0	175.0	140.5	137.3	Ø 5

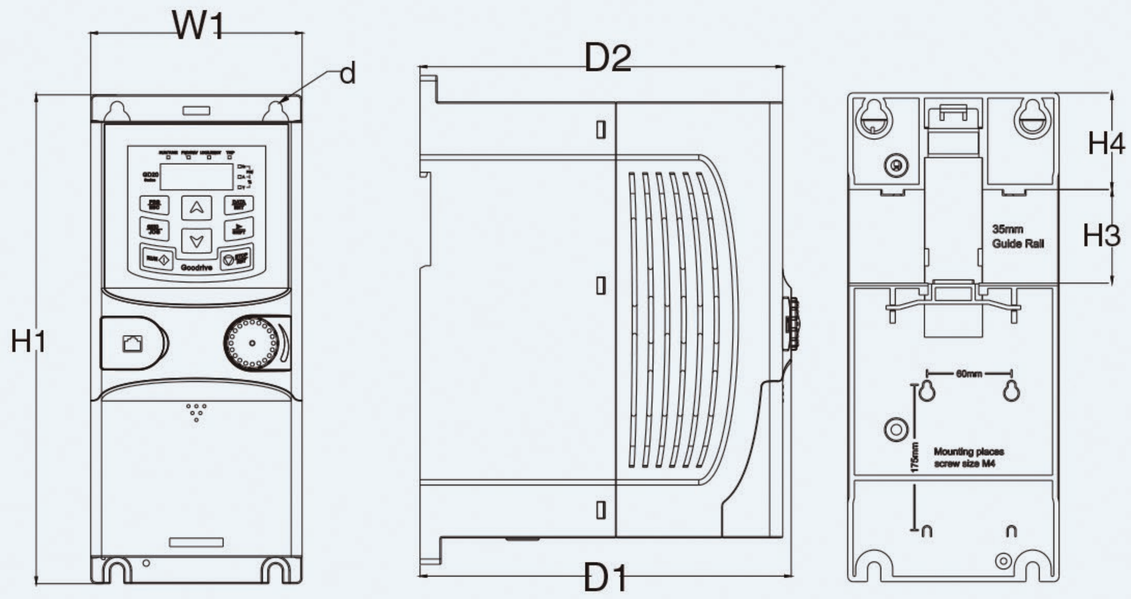

Rail mounting for the models below 2.2kW

(unit: mm)

Voltage level	VFD model	W1	H1	H3	H4	D1	D2	Installation hole diameter (d)
1PH 220V	0.4-0.75kW	80.0	160.0	35.4	36.6	123.5	120.3	Ø 5
1PH 220V in 1PH 220V out	0.4kW	80.0	160.0	35.4	36.6	123.5	120.3	Ø 5
1PH 220V	1.5-2.2kW	80.0	185.0	35.4	36.6	140.5	137.3	Ø 5
1PH 220V in 1PH 220V out	0.75-2.2kW	80.0	185.0	35.4	36.6	140.5	137.3	Ø 5
3PH 380V	0.75-2.2kW	80.0	185.0	35.4	36.6	140.5	137.3	Ø 5

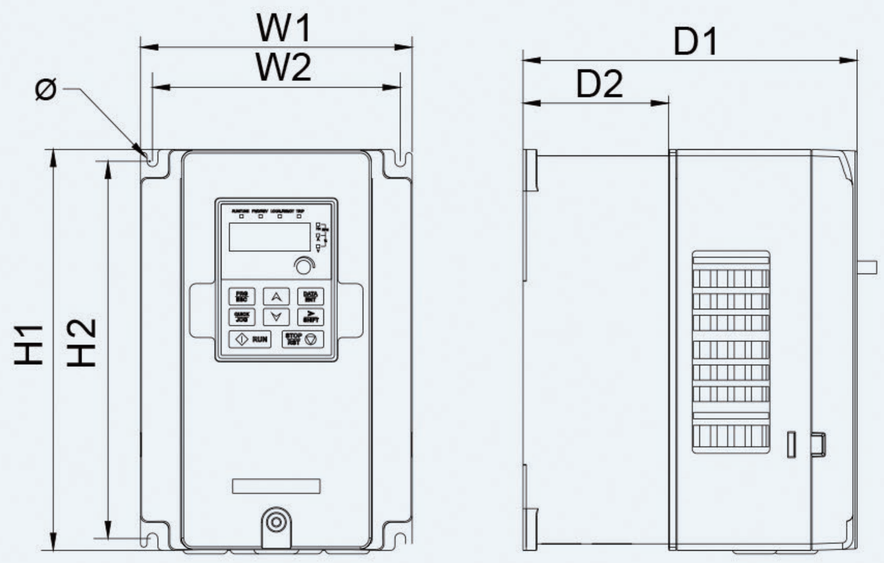

Wall mounting for the 4~200kW models

(unit: mm)

Voltage level	VFD model	W1	W2	H1	H2	D1	D2	Installation hole diameter (d)
3PH 220V	1.5-2.2kW	146.0	131.0	256.0	243.5	167.0	84.5	Ø 6
3PH 380V	4-5.5kW	146.0	131.0	256.0	243.5	167.0	84.5	Ø 6
	7.5-15kW	170.0	151.0	320.0	303.5	196.3	113.0	Ø 6
3PH 220V	4-7.5kW	170.0	151.0	320.0	303.5	196.3	113.0	Ø 6
3PH 380V	18.5-22kW	200.0	185.0	340.6	328.6	184.3	104.5	Ø 6
	30-37kW	250.0	230.0	400.0	380.0	202.0	123.5	Ø 6
	45-75kW	282.0	160.0	560.0	542.4	238.0	138.0	Ø 9
	90-110kW	338.0	200.0	554.0	534.0	326.2	--	Ø 9.5
	132-200kW	500.0	360.0	870.0	850.0	360.0	--	Ø 11

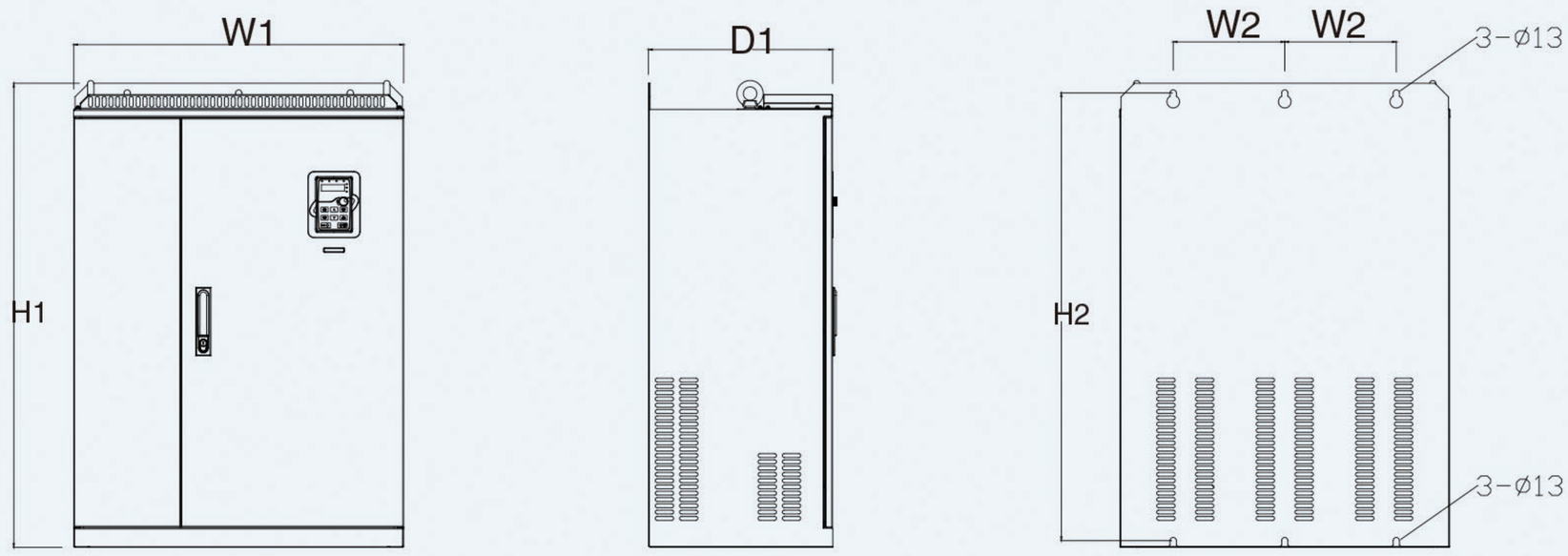

Flange mounting for the 4-200kW models

(unit: mm)

Voltage level	VFD model	W1	W2	H1	H2	D1	Installation hole diameter (d)
3PH 380V	220-315kW	680	230	960	926	387.9	Ø 13

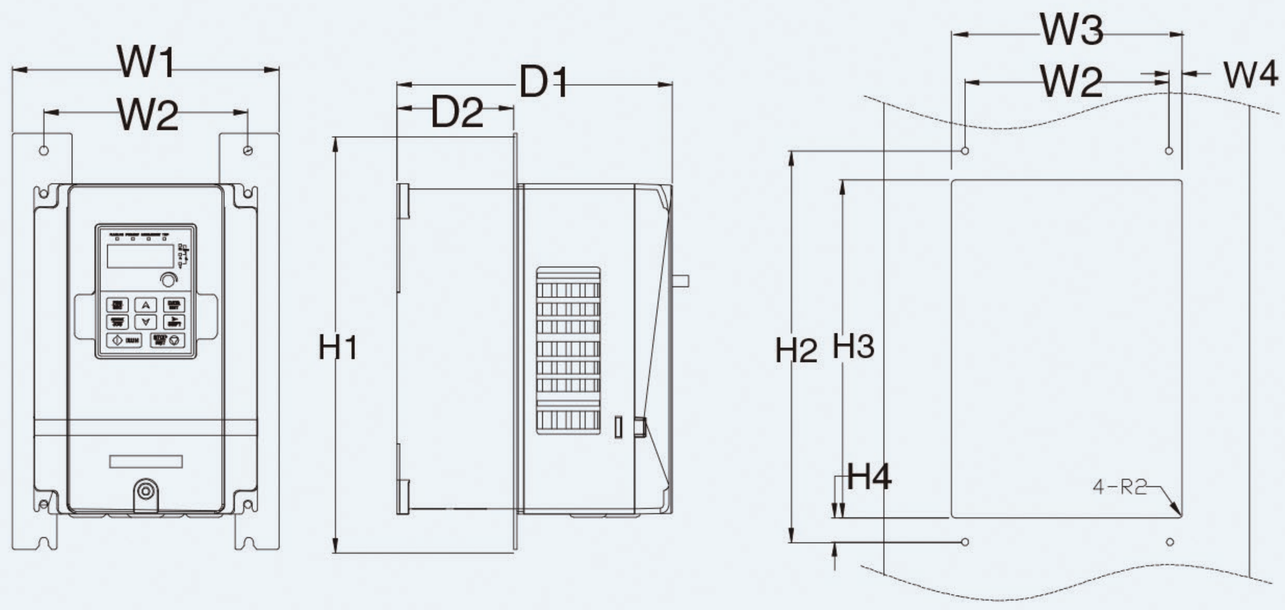

Flange mounting for the 4-200kW models

(unit: mm)

Voltage level	VFD model	W1	W2	W3	W4	H1	H2	H3	H4	D1	D2	Installation hole diameter (d)
3PH 380V	4-5.5kW	170.2	131	150	9.5	292	276	260	6	167	84.5	Ø 6
	7.5-15kW	191.2	151	174	11.5	370	351	324	12	196.3	113	Ø 6
3PH 220V	1.5-2.2kW	170.2	131	150	9.5	292	276	260	6	167	84.5	Ø 6
	4-7.5kW	191.2	151	174	11.5	370	351	324	12	196.3	113	Ø 6
3PH 380V	18.5-22kW	266	250	224	13	371	250	350.6	20.3	184.6	104	Ø 6
	30-37kW	316	300	274	13	430	300	410	55	202	118.3	Ø 6
	45-75kW	352	332	306	13	580	400	570	80	238	133.8	Ø 9
	90-110kW	418.5	361	389.5	14.2	600	559	370	108.5	329.5	149.5	Ø 9.5
	132-200kW	500	360	480	60	870	850	796	37	358	178.5	Ø 11

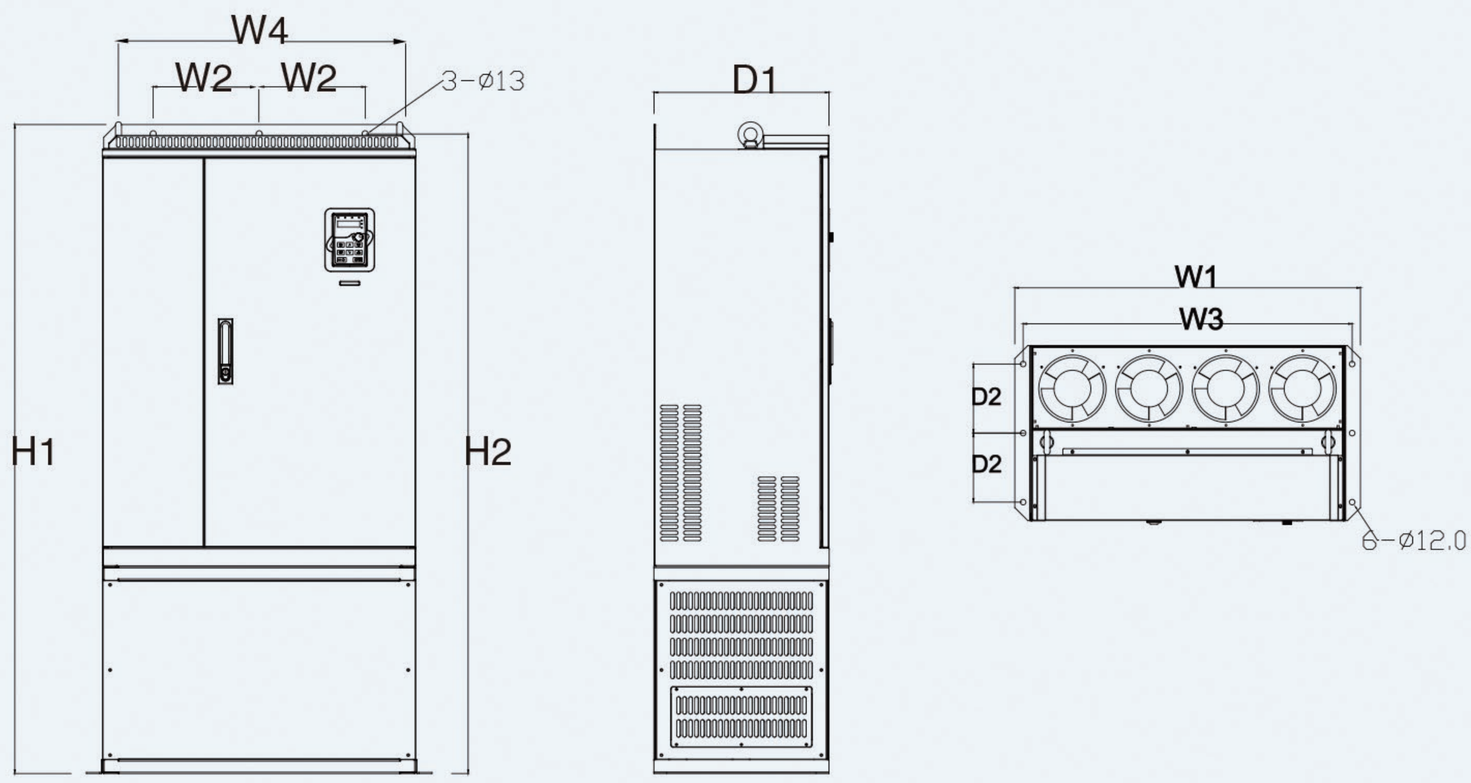

Floor mounting for the 220-315kW models

(unit: mm)

Voltage level	VFD model	W1	W2	W3	W4	H1	H2	D1	D2	Installation hole diameter (d)
3PH 380V	220-315kW	750	230	714	680	1410	1390	380	150	Ø 6

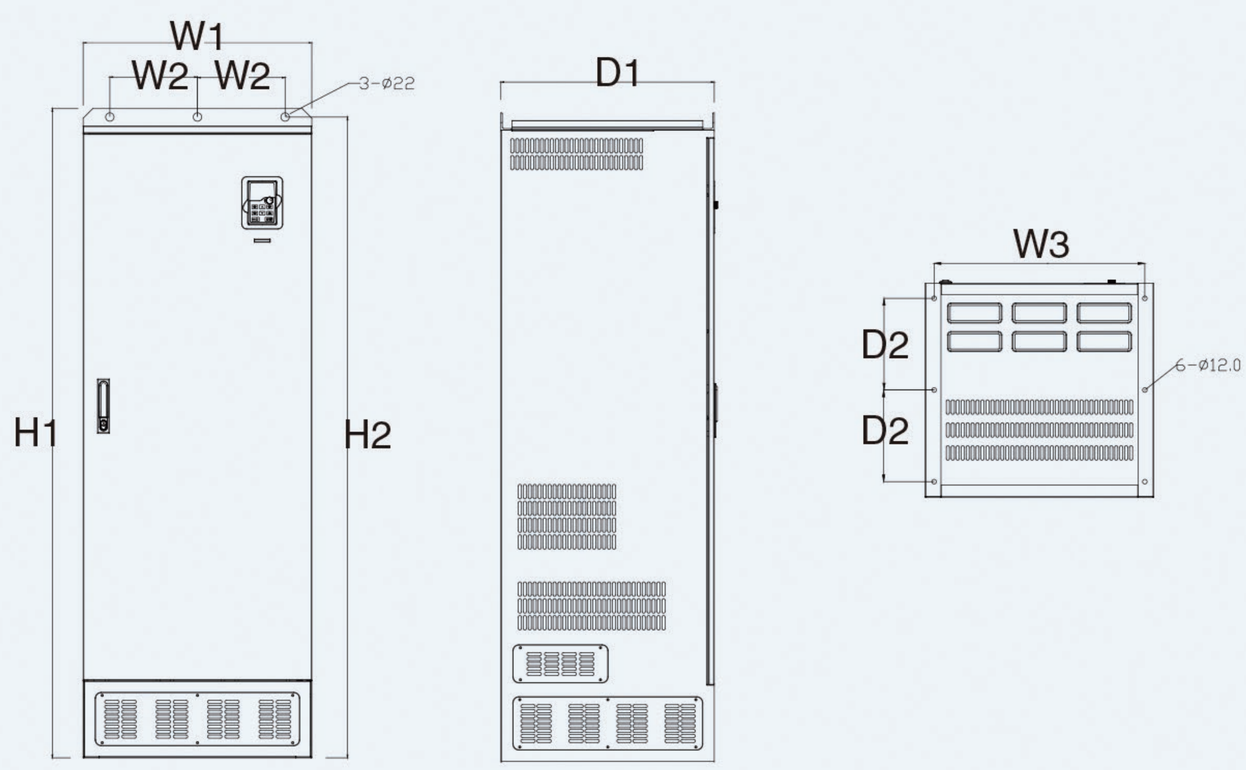

Floor mounting for the 355-500kW models

(unit: mm)

Voltage level	VFD model	W1	W2	W3	W4	H1	H2	D1	D2	Installation hole diameter (d)
3PH 380V	355-500kW	620	230	573	\	1700	1678	560	240	Ø 22/12

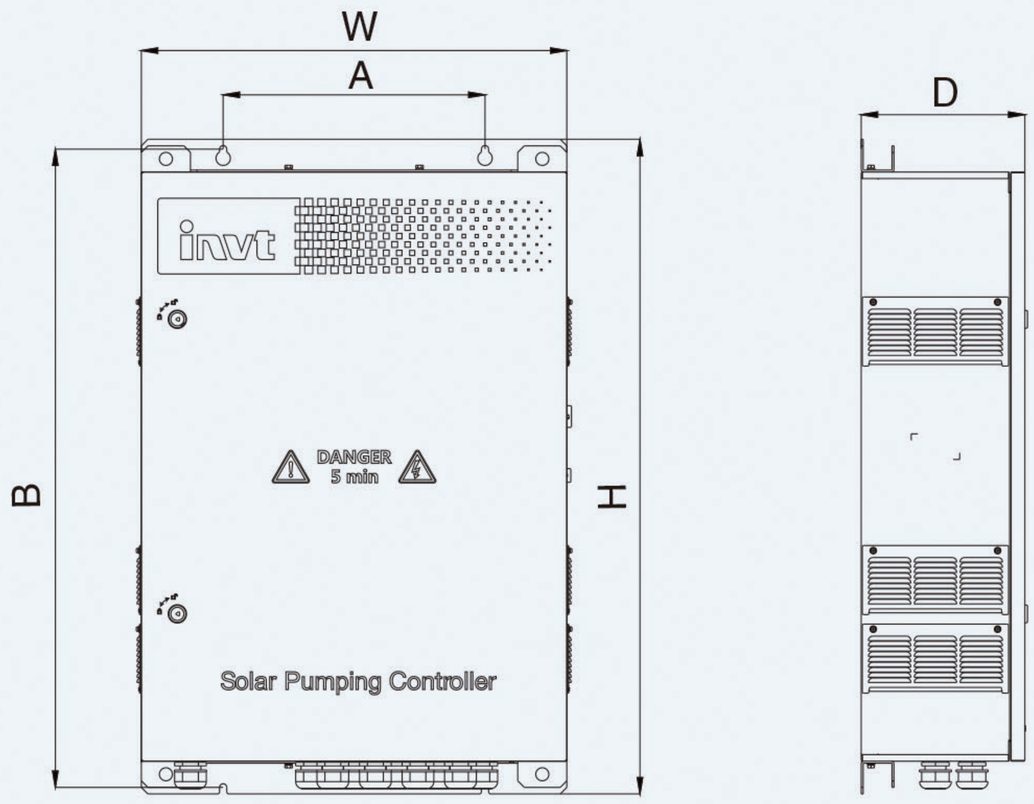

Wall mounting for the IP54 models

(unit: mm)

Power(kW)	Model	W	H	D	A	B
37	GD100-037G-45-PV-AS	650	1000	250	400	975
30	GD100-030G-45-PV-AS					
22	GD100-022G-45-PV-AS					
18.5	GD100-018G-45-PV-AS					
15	GD100-015G-45-PV-AS	550	900	225	400	875
11	GD100-011G-45-PV-AS					
7.5	GD100-7R5G-45-PV-AS					
	GD100-7R5G-25-PV-AS					
5.5	GD100-5R5G-45-PV-AS					
	GD100-5R5G-25-PV-AS					
4	GD100-004G-45-PV-AS					
	GD100-004G-25-PV-AS					
2.2	GD100-2R2G-45-PV-AS	550	700	200	400	675
	GD100-2R2G-S25-PV-AS					
	GD100-2R2G-SS25-PV-AS					
1.5	GD100-1R5G-45-PV-AS					
	GD100-1R5G-S25-PV-AS					
	GD100-1R5G-SS25-PV-AS					
0.75	GD100-0R7G-45-PV-AS					
	GD100-0R7G-S25-PV-AS					
	GD100-0R7G-S25-PV-AS					
0.4	GD100-0R4G-S25-PV-AS					
	GD100-0R4G-SS25-PV-AS					

Marketing service network

INVT Factory * 3

INVT Headquarter in Shenzhen

INVT Overseas Subsidiaries and office *8

More than 100 Overseas Partners

Factory

Overseas Subsidiaries or office

Your Trusted Industry Automation Solution Provider

Service line: 86-755-23535967 E-mail:overseas@invt.com.cn Website:www.invt.com

SHENZHEN INVT ELECTRIC CO.,LTD. INVT Guangming Technology Building, Songbai Road, Matian, Guangming District, Shenzhen, China

Industrial Automation:
- HMI
- PLC
- VFD
- Servo System
- Elevator Intelligent Control System
- Rail Transit Traction System

Electric Power:
- UPS
- DCIM
- Solar Inverter
- New Energy Vehicle Powertrain System
- New Energy Vehicle Charging System
- New Energy Vehicle Motor

INVT Copyright.
Information may be subject to change without notice during product improving.

66003-00121 20220408 (V2.0)