Operation Manual

Goodrive350A Series
High-performance
Multifunction VFD



SHENZHEN INVT ELECTRIC CO., LTD.

Preface

Thank you for choosing Goodrive350A series variable-frequency drive (VFD).

If not otherwise specified in this manual, the VFD always indicates Goodrive350A series VFD, which is a high-performance multifunctional VFD that can drive both synchronous motors (SMs) and asynchronous motors (AMs) and supports torque control, speed control, and position control. The VFD is armed with advanced vector control technology and the latest digital processor dedicated for motor control, thus enhancing product reliability and adaptability to the environment. The VFD adopts customized and industrialized design to realize excellent control performance through optimized functions and flexible applications.

In order to meet diversified customer demands, the VFD provides abundant expansion cards including programmable expansion card, PG card, communication card and I/O expansion card to achieve various functions as needed. Each VFD can be installed with three expansion cards at most.

The programmable expansion card adopts the mainstream development environment for customers to carry out secondary development easily, fulfilling varied customized needs and reducing customer cost.

The PG card supports a variety of encoders like incremental encoders and resolver-type encoders. In addition, it also supports pulse reference and frequency-division output. The PG card adopts digital filter technology to improve EMC performance and to realize stable transmission of the encoder signal over a long distance. It is equipped with encoder offline detection function to contain the impact of system faults.

The VFD supports multiple kinds of popular communication modes to realize complicated system solutions. It can be connected to the internet with optional wireless communication card, by which you can monitor the VFD state anywhere any time through mobile App.

The VFD uses high power density design. Some power ranges carry built-in DC reactor and braking unit to save installation space. Through overall EMC design, it can satisfy the low noise and low electromagnetic interference requirements to cope with challenging grid, temperature, humidity and dust conditions, thus greatly improving product reliability.

This operation manual presents installation wiring, parameter setup, fault diagnosis and trouble shooting, and precautions related to daily maintenance. Read through this manual carefully before installation to ensure the VFD is installed and operated in a proper manner to give full play to its excellent performance and powerful functions.

If the product is ultimately used for military affairs or manufacture of weapon, it will be listed on the export control formulated by Foreign Trade Law of the People's Republic of China. Rigorous review and necessary export formalities are needed when exported.

We reserve the right to update the manual information without prior notice and have the final interpretation for the manual content.

Contents

1 Safety precautions 1
1.1 What this chapter contains 1
1.2 Safety definition 1
1.3 Warning symbols 1
1.4 Safety guidelines 2
2 Quick startup 5
2.1 What this chapter contains 5
2.2 Unpacking inspection 5
2.3 Checking before applying 5
2.4 Environment 5
2.5 Installation confirmation 6
2.6 Basic commissioning 6
2.7 Safety standard related data 7
3 Product overview 8
3.1 What this chapter contains 8
3.2 Basic principle 8
3.3 Product specifications 9
3.4 Product nameplate 12
3.5 Model designation code 12
3.6 Product ratings 13
3.7 Structure diagram 14
4 Installation guidelines 15
4.1 What this chapter contains 15
4.2 Mechanical installation 15
4.3 Main circuit standard wiring 21
4.4 Control circuit standard wiring 25
4.5 Wiring protection 28
5 Basic operation guidelines 30
5.1 What this chapter contains 30
5.2 Keypad introduction 30
5.3 Keypad display 33
5.4 Operating the VFD through the keypad 35
5.5 Basic operations 46
6 Function parameter list 134
5.5 What this chapter contains 134
5.6 Function parameter list 134
7 Troubleshooting 282
7.1 What this chapter contains 282

7.2 Indications of alarms and faults....282
7.3 Fault reset....282
7.4 Fault history....282
7.5 VFD faults and solutions....282
7.6 Analysis on common faults....292
7.7 Countermeasures on common interference....298
8 Maintenance....303
8.1 What this chapter contains....303
8.2 Periodical inspection....303
8.3 Cooling fan....305
8.4 Capacitor....306
8.5 Power cable....308
9 Communication....309
9.1 What this chapter contains....309
9.2 Modbus protocol introduction....309
9.3 Application....309
9.4 RTU command code and communication data....315
9.5 Common communication faults....331
Appendix A Expansion cards....332
A.1 Model definition....332
A.2 Dimensions and installation....341
A.3 Wiring....344
A.4 IO expansion cards....344
A.5 Programmable expansion card (EC-PC502-00)....349
A.6 Communication cards....351
A.7 PG cards....362
A.8 IoT cards....379
Appendix B Technical data....381
B.1 What this chapter contains....381
B.2 Derated application....381
B.3 Grid specifications....382
B.4 Motor connection data....382
B.5 Application standards....382
B.6 EMC regulations....383
Appendix C Dimension drawings....385
C.1 What this chapter contains....385
C.2 Keypad structure....385
C.3 VFD structure....386
C.4 VFD structure....386
Appendix D Optional peripheral accessories....391

D.1 What this chapter contains 391
D.2 Wiring of peripheral accessories 391
D.3 Power supply 393
D.4 Cables 393
D.5 Breaker and electromagnetic contactor 397
D.6 Harmonic filter 398
D.7 EMC filters 401
D.8 Braking system 403
Appendix E STO function description 407
E.1 STO function logic 407
E.2 STO channel delay description 407
E.3 STO function installation checklist 408
Appendix F Energy efficiency data 409
Appendix G Further information 411
G.1 Product and service queries 411
G.2 Feedback on INVT VFD manuals 411
G.3 Documents on the Internet 411

1 Safety precautions

1.1 What this chapter contains

Read this manual carefully and follow all safety precautions before moving, installing, operating and servicing the VFD. If these safety precautions are ignored, physical injury or death may occur, or damage may occur to the equipment.

If any physical injury or death or damage to the equipment occur due to neglect of the safety precautions in the manual, our company will not be responsible for any damages and we are not legally bound in any manner.

1.2 Safety definition

Danger: Severe personal injury or even death can result if related requirements are not followed.

Warning: Personal injury or equipment damage can result if related requirements are not followed.

Note: Actions taken to ensure proper running.

Trained and qualified professionals: People working on the VFD must have received professional electrical and safety training and obtained the certificates, and must be familiar with all steps and requirements of VFD installing, commissioning, running and maintaining and capable to prevent any emergencies.

1.3 Warning symbols

Warnings caution you about conditions which can result in serious injury or death and/or damage to the equipment, and advice on how to avoid the danger. Following warning symbols are used in this manual.

Symbols	Name	Instruction	Abbreviation
 Danger	Danger	Serious physical injury or even death may occur if related requirements are not followed	
 Warning	Warning	Physical injury or damage to the equipment may occur if related requirements are not followed	
 Forbid	Electrostatic discharge	The PCBA may be damaged if related requirements are not followed	
 Hot	Hot sides	The VFD base may become hot. Do not touch.	
	Electric shock	As high voltage still presents in the bus capacitor after power off, wait for at least five minutes (or 15 min / 25 min, depending on the warning	

Symbols	Name	Instruction	Abbreviation
		symbols on the machine) after power off to prevent electric shock	
	Read manual	Read the operation manual before operating on the equipment	
Note	Note	Actions taken to ensure proper operation	**Note**

1.4 Safety guidelines



✧ Only trained and qualified electricians are allowed to carry out related operations.

✧ Do not perform wiring, inspection or component replacement when power supply is applied. Ensure all the input power supplies are disconnected before wiring and inspection, and wait for at least the time designated on the VFD or until the DC bus voltage is less than 36V. The minimum waiting time is listed in the table below.

VFD model	Minimum waiting time
1R5G/2R2P–110G/132P	5 min
132G/160P–315G/355P	15 min
355G/400P and higher	25 min



✧ Do not refit the VFD unless authorized; otherwise, fire, electric shock or other injuries may occur.



✧ The base of the radiator may become hot during running. Do not touch to avoid hurt.



✧ The electrical parts and components inside the VFD are electrostatic. Take measures to prevent electrostatic discharge during related operation.

1.4.1 Delivery and installation



✧ Install the VFD on fire-retardant material and keep the VFD away from combustible materials.

✧ Connect the optional braking parts (braking resistors, braking units or feedback units) according to the wiring diagram.

✧ Do not operate on a damaged or incomplete VFD.

✧ Do not touch the VFD with wet items or body parts; otherwise, electric shock may occur.

Note:

✧ Select appropriate tools for delivery and installation to ensure a safe and proper running of the VFD and avoid physical injury or death. To ensure physical safety, the installation staff should take mechanical protective measures like wearing safety shoes and working uniforms

- ✧ Protect the VFD against physical shock or vibration during delivery and installation.
- ✧ Do not carry the VFD by its front cover only as the cover may fall off.
- ✧ The installation site must be away from children and other public places.
- ✧ When the installation site altitude exceeds 1000m, derate by 1% for every increase of 100m; when the installation site altitude exceeds 3000m, consult local INVT dealer or office.
- ✧ Use the VFD in proper environment. (For details, see "Installation environment".)
- ✧ Prevent the screws, cables and other conductive parts from falling into the VFD.
- ✧ As leakage current of the VFD during running may exceed 3.5mA, ground properly and ensure the grounding resistance is less than 10Ω. The conductivity of PE grounding conductor is the same as that of the phase conductor (with the same cross sectional area).
- ✧ R, S and T are the power input terminals, and U, V and W are output motor terminals. Connect the input power cables and motor cables properly; otherwise, damage to the VFD may occur.

1.4.2 Commissioning and running



- ✧ Disconnect all power sources applied to the VFD before terminal wiring, and wait for at least the time designated on the VFD after disconnecting the power sources.
- ✧ High voltage presents inside the VFD during running. Do not carry out any operation on the VFD during running except for keypad setup. The product control terminals form extra-low voltage circuits. Therefore, you need to prevent the control terminals from connecting to accessible terminals of other devices.
- ✧ The VFD may start up by itself when P01.21=1. Do not get close to the VFD and motor.
- ✧ The VFD cannot be used as "Emergency-stop device".
- ✧ The VFD cannot act as an emergency brake for the motor; it is a must to install mechanical brake device.
- ✧ During driving a permanent magnet SM, besides above-mentioned items, the following work must be done before installation and maintenance:
  a) Disconnect all the input power sources including main power and control power.
  b) Ensure the permanent-magnet SM has been stopped, and the voltage on output end of the VFD is lower than 36V.
  c) After the permanent-magnet SM stops, wait for at least the time designated on the VFD, and ensure the voltage between + and - is lower than 36V.
  d) During operation, ensure the permanent-magnet SM cannot run again by the action of external load; it is recommended to install effective external brake device or disconnect the direct electrical connection between permanent-magnet SM and the VFD.

Note:

✧ Do not switch on or switch off input power sources of the VFD frequently.

✧ If the VFD has been stored for a long time without being used, set the capacitance (see "Maintenance" and carry out inspection and pilot run on the VFD before use.

✧ Close the front cover before running; otherwise, electric shock may occur.

1.4.3 Maintenance and component replacement

	✧ Only trained and qualified professionals are allowed to perform maintenance, inspection, and component replacement on the VFD. ✧ Disconnect all the power sources applied to the VFD before terminal wiring, and wait for at least the time designated on the VFD after disconnecting the power sources. ✧ Take measures to prevent screws, cables and other conductive matters from falling into the VFD during maintenance and component replacement.

Note:

✧ Use proper torque to tighten the screws.

✧ Keep the VFD and its parts and components away from combustible materials during maintenance and component replacement.

✧ Do not carry out insulation voltage-endurance test on the VFD, or measure the control circuits of the VFD with megameter.

✧ Take proper anti-static measures on the VFD and its internal parts during maintenance and component replacement.

1.4.4 What to do after scrapping

	✧ The heavy metals inside the VFD should be treated as industrial effluent.
	✧ When the life cycle ends, the product should enter the recycling system. Dispose of it separately at an appropriate collection point but not place it in the normal waste stream.

2 Quick startup

2.1 What this chapter contains

This chapter introduces the basic installation and commissioning rules that you need to follow to realize quick installation and commissioning.

2.2 Unpacking inspection

Check the following after receiving the product.

● Whether the packing box is damaged or dampened.
● Whether the model identifier on the exterior surface of the packing box is consistent with the purchased model.
● Whether the interior surface of the packing box is abnormal, for example, in wet condition, or whether the enclosure of the VFD is damaged or cracked.
● Whether the VFD nameplate is consistent with the model identifier on the exterior surface of the packing box.
● Whether the accessories (including the manual and keypad) inside the packing box are complete.

If any problems are found, contact the local dealer or INVT office.

2.3 Checking before applying

Check the following before applying the VFD.

● Check the load type to verify that there is no overload of the VFD during work and check whether the power class of the VFD needs to be increased.
● Check whether the actual running current of the motor is less than the rated current of the VFD.
● Check whether the control accuracy required by the load is the same of the VFD.
● Check whether the grid voltage is consistent with the rated voltage of the VFD.
● Check whether expansion card are needed for selected functions.

2.4 Environment

Check the following before the actual installation and use:

Note: For a cabinet-built VFD, the ambient temperature is the air temperature inside the cabinet.

● Check whether the ambient temperature of the VFD exceeds 40°C. If it exceeds 40°C, derate 1% for every increase of 1°C. It is not recommended to use the VFD if the ambient temperature exceeds 50°C.
● Check whether the ambient temperature of the VFD in actual use is lower than -10°C. If yes, use heating facilities.
● When the altitude exceeds 1000m, derate by 1% for every increase of 100m. When the altitude exceeds 3000m, consult the local INVT dealer or local INVT office for details.

● Check whether the humidity of the actual usage site exceeds 90% and condensation occurs. If yes, take additional protective measures.
● Check whether the actual use site may be exposed to direct sunlight or may have the chance of ingress of foreign objects. If yes, take additional protective measures.
● Check whether there is dust, explosive gas, or flammable gas in the actual use site. If yes, take additional protective measures.

2.5 Installation confirmation

Check the following after the VFD installation:

● Check whether the load ranges of the input power cable and motor cable meet the actual load requirement.
● Check whether correct accessories are selected for the VFD, the accessories are correctly and properly installed, and the installation cables meet the requirements of all components (including the reactor, input filter, output reactor, output filter, DC reactor, braking unit and braking resistor).
● Check whether the VFD is installed on non-flammable materials and the heat-radiating accessories (such as the reactor) are away from flammable materials.
● Check whether all control cables and power cables are run separately and the routing complies with EMC requirement.
● Check whether all grounding systems are properly grounded according to the requirements of the VFD.
● Check whether all the installation clearances of the VFD meet the requirements in the operation manual.
● Check whether the installation conforms to the instructions in the operation manual. It is recommended that the VFD be installed uprightly.
● Check whether the external connection terminals of the VFD are tightly fastened and the torque is appropriate.
● Check whether there are screws, cables, or other conductive items left in the VFD. If yes, get them out.

2.6 Basic commissioning

Complete the basic commissioning as follows before the actual use of the VFD:

● According to the actual motor parameters, select the motor type, set motor parameters, and select the VFD control mode.
● Autotune. If possible, de-couple the VFD from the motor load to start dynamic autotuning. If the VFD cannot be de-coupled from the load, perform static autotuning.
● Adjust the ACC/DEC time according to the actual work condition of the load.
● Perform device commissioning by means of jogging and check whether the motor rotational direction is correct. If not, change the rotation direction by swapping any two phase wires of

the motor.
● Set all control parameters and then operate.

2.7 Safety standard related data

IEC/EN 61508 (Class A system)							ISO 13849**			
SIL	**PFH**	**HFT**	**SFF**	**λdu**	**λdd**	**PTI***	**PL**	**CCF**	**DC**	**Category**
2	$8.73x10^{-10}$	1	71.23%	$1.79x10^{-9}$	0	1 year	d	57	60%	3

* PTI: Proof test interval

** Depends on the classification defined on the EN ISO 13849-1.

3 Product overview

3.1 What this chapter contains

This chapter mainly introduces the operation principles, product features, layouts, nameplates and model designation rules.

3.2 Basic principle

The VFD is used to control asynchronous AC induction motors and permanent-magnet synchronous motors. The figure below shows the main circuit diagram of the VFD. The rectifier converts 3PH AC voltage into DC voltage, and the capacitor bank of intermediate circuit stabilizes the DC voltage. The VFD converts DC voltage into the AC voltage used by AC motor. When the circuit voltage exceeds the maximum limit value, external braking resistor will be connected to intermediate DC circuit to consume the feedback energy.

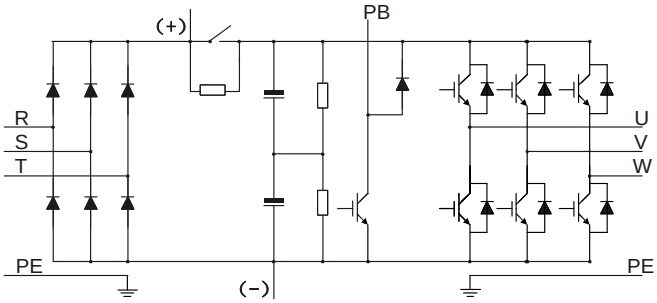

Figure 3–1 Main circuit diagram for 015G/018P and lower models

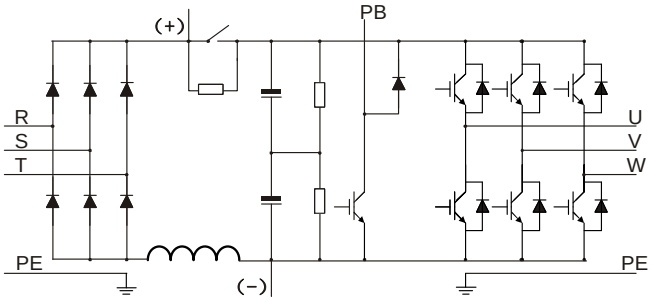

Figure 3–2 Main circuit diagram for 018G/022P–037G/045P

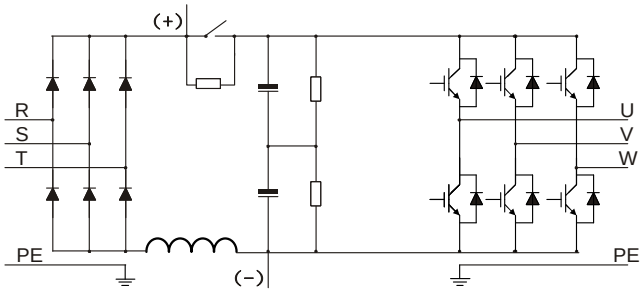

Figure 3–3 Main circuit diagram for 045G/055P–110G/132P

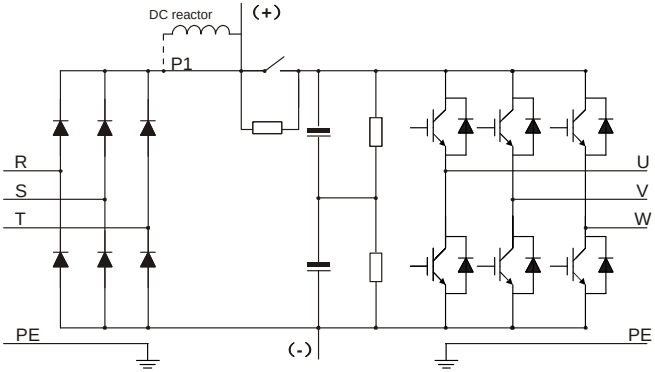

Figure 3–4 Main circuit diagram for 132G/160P and higher models

Note:

- 132G/160P and higher models can be connected to external DC reactors. Before connection, take off the copper bar between P1 and (+). 075G/090P and higher models can be connected to external braking units. DC reactors and braking units are optional parts.
- 018G/022P–110G/132P models are equipped with built-in DC reactors.
- 037G/045P and lower models carry built-in braking units. Braking units are optional parts for 045G/055P–055G/075P models and they can be built in or externally connected to the models.

3.3 Product specifications

Function description		Specification
Power input	Input voltage (V)	AC 3PH 380V (-15%)–440V (+10%)
	Input current (A)	See "Product ratings".
	Input frequency (Hz)	50Hz or 60Hz, allowable range: 47–63Hz
Power output	Output voltage (V)	0–Input voltage
	Output current (A)	See "Product ratings".

Function description		Specification
	Output power (kW)	See "Product ratings".
	Output frequency (Hz)	0–400Hz
Technical control performance	Control mode	Space voltage vector control, sensorless vector control (SVC), and vector control with sensor feedback (FVC)
	Motor type	Asynchronous motor (AM) and permanent magnetic synchronous motor (SM)
	Speed regulation ratio	For AM1: 1:200 (SVC); for SM1, 1:20 (SVC); 1:1000 (FVC)
	Speed control precision	± 0.2% (SVC); ± 0.02% (FVC)
	Speed fluctuation	± 0.3% (SVC)
	Torque response	< 20ms (SVC); < 10ms (FVC)
	Torque control precision	10% (SVC); 5% (FVC)
	Starting torque	For AMs: 0.25Hz/150% (SVC) For SMs: 2.5Hz/150% (SVC) 0Hz/200% (FVC)
	Overload capacity	150% for 1 minute (for the G type) ; 120% for 1 minute (for the P type)
Running control performance	Frequency setting method	Settings can be implemented through digital, analog, pulse frequency, multi-step speed running, simple PLC, PID communication, communication and so on. Settings can be combined and the setting channels can be switched.
	Automatic voltage regulation	The output voltage can be kept constant although the grid voltage changes.
	Fault protection	More than 30 protection functions, such as protection against overcurrent, overvoltage, undervoltage, overtemperature, phase loss, and overload
	Speed tracking restart	Used to implement impact-free smooth startup for rotating motors **Note:** The function is available only for 004G/5R5P and higher models.
Peripheral interface	Terminal analog input resolution	No more than 20mV
	Terminal digital input resolution	No more than 2ms

Function description		Specification
	Analog input	2 inputs; AI1: 0–10V/0–20mA; AI2: -10–10V
	Analog output	1 input; AO1: 0–10V/0–20mA
	Digital input	Four regular inputs; max. frequency: 1kHz; internal impedance: 3.3kΩ Two high-speed inputs; max. frequency: 50kHz; supporting quadrature encoder input; with speed measurement function
	Digital output	One high-speed pulse output; max. frequency: 50kHz One Y terminal open collector output
	Relay output	Two programmable relay outputs RO1A: NO; RO1B: NC; RO1C: common RO2A: NO; RO2B: NC; RO2C: common Contact capacity: 3A/AC250V, 1A/DC30V
	Extended interfaces	Three extended interfaces: SLOT1, SLOT2, and SLOT3 (control board of above 7.5kW) Supporting PG cards, programmable expansion cards, communication cards, I/O cards and so on
Other	Mounting method	Wall mounting, floor mounting, and flange mounting
	Temperature of running environment	-10 – +50°C; derating is required if the ambient temperature exceeds 40°C
	Ingress protection rating	IP20
	Pollution degree	Degree 2
	Cooling method	Forced air cooling
	Braking unit	The VFD models of 037G/045P and lower contain built-in braking units. The braking units are optional parts for the 045G/055P–055/075P VFD models, and the braking units can be built in or externally connected.
	EMC filter	The transmission of the VFD meets the IEC/EN 61800-3 C3 requirements. When optional filters are connected externally, the transmission of the VFD can meet the IEC/EN 61800-3 C2 requirements. **Note:** Comply with the EMC requirements and the technical requirements for the motors and motor cables in the appendix in the manual.

3.4 Product nameplate

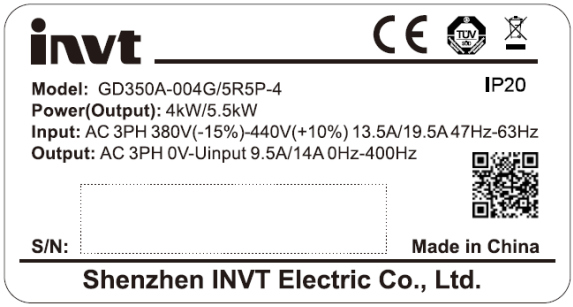

Figure 3–5 Product nameplate

Note:

- This is a nameplate example of a standard VFD product. The CE/TUV/IP20 marking on the top right will be marked according to actual certification conditions.
- Scan the QR code at the bottom of the right to download the product APP and operation manual.

3.5 Model designation code

A model designation code contains product information. You can find the model designation code on the VFD nameplate.

GD350A-004G/5R5P-4
① ② ③

Figure 3–6 Model description

Field	No.	Description	Content
Abbreviation of product series	①	Abbreviation of product series	GD350A: Goodrive350A series high-performance multifunction VFD
Rated power	②	Power range + load type	5R5: 5.5kW G: Constant torque load P: Variable torque load
Voltage class	③	Voltage class	4: AC 3PH 380V(-15%)–440V(+10%)
Note: Braking units have been built in the 037G/045P and lower models as standard configuration. Braking units are not standard configuration for the 045G/055P–055G/075P models. (If you want to use braking units for these models, add suffix "-B" at the end of the model codes in your purchase orders, for example, GD350A-045G/055P-4-B.)			

3.6 Product ratings

VFD model	Constant torque			Variable torque		
	Output power (kW)	Input current (A)	Output current (A)	Output power (kW)	Input current (A)	Output current (A)
GD350A-1R5G/2R2P-4	1.5	5.0	3.7	2.2	5.8	5
GD350A-2R2G/003P-4	2.2	5.8	5	3	11	7
GD350A-004G/5R5P-4	4	13.5	9.5	5.5	19.5	12.5
GD350A-5R5G/7R5P-4	5.5	19.5	14	7.5	23	17
GD350A-7R5G/011P-4	7.5	25	18.5	11	30	23
GD350A-011G/015P-4	11	32	25	15	40	32
GD350A-015G/018P-4	15	40	32	18.5	45	38
GD350A-018G/022P-4	18.5	45	38	22	51	45
GD350A-022G/030P-4	22	51	45	30	64	60
GD350A-030G/037P-4	30	64	60	37	80	75
GD350A-037G/045P-4	37	80	75	45	98	92
GD350A-045G/055P-4	45	98	92	55	128	115
GD350A-055G/075P-4	55	128	115	75	139	150
GD350A-075G/090P-4	75	139	150	90	168	170
GD350A-090G/110P-4	90	168	180	110	201	215
GD350A-110G/132P-4	110	201	215	132	265	260
GD350A-132G/160P-4	132	265	260	160	310	305
GD350A-160G/185P-4	160	310	305	185	345	340
GD350A-185G/200P-4	185	345	340	200	385	380
GD350A-200G/220P-4	200	385	380	220	430	425
GD350A-220G/250P-4	220	430	425	250	460	480
GD350A-250G/280P-4	250	460	480	280	500	530
GD350A-280G/315P-4	280	500	530	315	580	600
GD350A-315G/355P-4	315	580	600	355	625	650
GD350A-355G/400P-4	355	625	650	400	715	720
GD350A-400G/450P-4	400	715	720	450	840	820
GD350A-450G/500P-4	450	840	820	500	890	860
GD350A-500G-4	500	890	860			

Note:

- The VFD input current is measured in cases where the input voltage is 380V without an additional reactor.
- The rated output current is the output current corresponding to 380V output voltage.

- Within the allowable input voltage range, the output current and power cannot exceed the rated output current and power.

3.7 Structure diagram

The VFD structure is shown in the following figure (using the 030G/037P VFD model as an example):

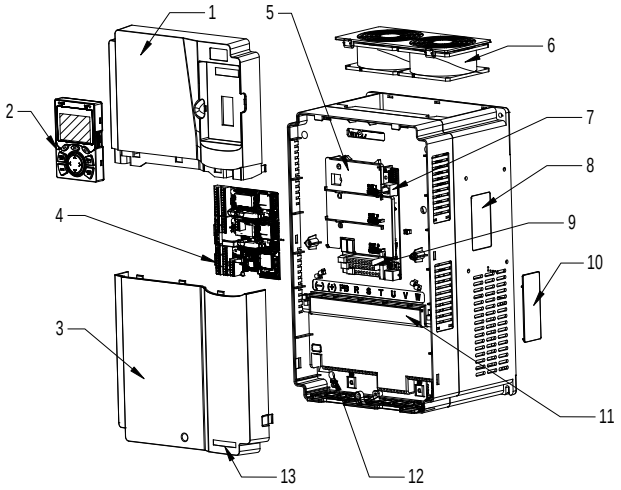

Figure 3–7 Structure diagram

No.	Item	Description
1	Upper cover	Used to protect internal components.
2	Keypad	For details, see "Operating the VFD through the keypad".
3	Lower cover	Used to protect internal components.
4	Expansion card	Optional. For details, see "Expansion cards".
5	Control board baffle	Used to protect the control board and install expansion cards.
6	Cooling fan	For details, see "Maintenance".
7	Keypad interface	Used to connect the keypad.
8	Nameplate	See "Product nameplate".
9	Control terminals	See "Installation guidelines".
10	Ventilation hole cover	Optional. Using the ventilation hole cover can enhance the protection rating but also increase the internal temperature, which requires derating.
11	Main circuit terminals	For details, see "Installation guidelines".
12	POWER indicator	Indicator of the power supply.
13	GD350A product series label	See "Model designation code".

4 Installation guidelines

4.1 What this chapter contains

This chapter introduces the mechanical and electrical installations of the VFD.

	✧ Only trained and qualified professionals are allowed to carry out the operations mentioned in this chapter. Please carry out operations according to instructions presented in Safety precautions. Ignoring these safety precautions may lead to physical injury or death, or equipment damage. ✧ Ensure the VFD power is disconnected before installation. If the VFD has been powered on, disconnect the VFD and wait for at least the time designated on the VFD, and ensure the POWER indicator is off. Users are recommended to use a multimeter to check and ensure the VFD DC bus voltage is below 36V. ✧ Installation must be designed and done according to applicable local laws and regulations. INVT does not assume any liability whatsoever for any installation which breaches local laws and regulations. If recommendations given by INVT are not followed, the VFD may experience problems that the warranty does not cover.

4.2 Mechanical installation

4.2.1 Installation environment

Installation environment is essential for the VFD to operate at its best in the long run. The installation environment of the VFD should meet the following requirements.

Environment	Condition
Installation site	Indoors
Ambient temperature	✧ -10–+50°C; ✧ When the ambient temperature exceeds 40°C, derate 1% for every additional 1°C; ✧ It is not recommended to use the VFD when the ambient temperature is above 50°C; ✧ In order to improve reliability, do not use the VFD in cases where the temperature changes rapidly; ✧ When the VFD is used in a closed space e.g. control cabinet, use cooling fan or air conditioner to prevent internal temperature from exceeding the temperature required; ✧ When the temperature is too low, if restart an VFD which has been idled for a long time, it is required to install external heating device before use to eliminate the freeze inside the VFD, failing to do so may cause damage to the VFD.

Environment	Condition
Humidity	✧ The relative humidity (RH) of the air is less than 90%; ✧ Condensation is not allowed; ✧ The max RH cannot exceed 60% in the environment where there are corrosive gases.
Storage temperature	-30–+60°C
Running environment	The installation site should meet the following requirements. ✧ Away from electromagnetic radiation sources; ✧ Away from oil mist, corrosive gases and combustible gases; ✧ Ensure foreign object like metal powder, dust, oil and water will not fall into the VFD (do not install the VFD onto combustible object like wood); ✧ Away from radioactive substance and combustible objects; ✧ Away from harmful gases and liquids; ✧ Low salt content; ✧ No direct sunlight
Altitude	✧ Below 1000m; ✧ When the altitude exceeds 1000m, derate 1% for every additional 100m; ✧ When the altitude exceeds 2000m, configure isolation transformer on the input end of the VFD. It is recommended to keep the altitude below 5000m.
Vibration	Max. vibration acceleration: 5.8m/s^2 (0.6g)
Installation direction	Install the VFD vertically to ensure good heat dissipation effect

Note:

- The VFD must be installed in a clean and well-ventilated environment based on the IP level.
- The cooling air must be clean enough and free from corrosive gases and conductive dust.

4.2.2 Installation direction

The VFD can be installed on the wall or in a cabinet.

The VFD must be installed vertically. Check the installation position according to following requirements. See Appendix C Dimension drawings.

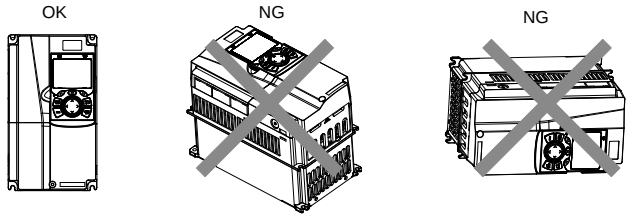

Figure 4–1 Installation direction of the VFD

4.2.3 Installation mode

There are three kinds of installation modes based on different VFD dimensions.

- Wall-mounting: suitable for 315G/355P and lower models
- Flange-mounting: suitable for 200G/220P and lower models
- Floor-mounting: suitable for 220G/250P–500G models

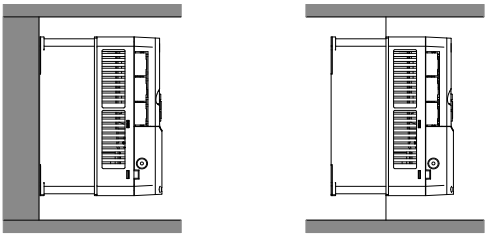

Figure 4–2 Installation mode

(1) Mark the position of the installation hole. See appendix for the position of installation hole;

(2) Mount the screws or bolts onto the designated position;

(3) Put the VFD on the wall;

(4) Tighten the fixing screws on the wall.

Note:

- The flange-mounting plate is a must for 1R5G/2R2P–075G/090P models that adopt flange-mounting mode; while 090G/110P–200G/220P models need no flange-mounting plate.
- The installation base is optional for 220G/250P–315G/355P models. The base can hold an input AC reactor (or DC reactor) and an output AC reactor.

4.2.4 Single-unit installation

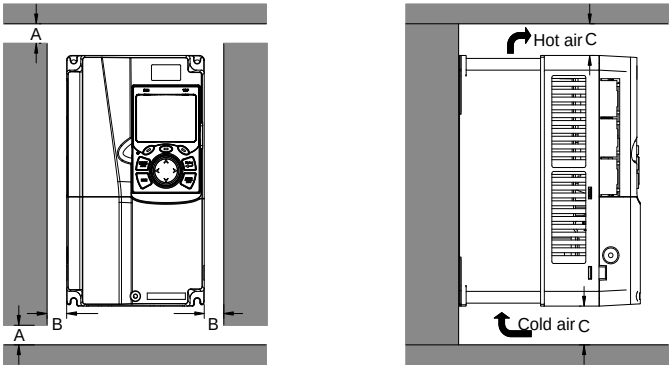

Figure 4–3 Single-unit installation

Note: The min. dimension of A, B and C is 100mm.

4.2.5 Multiple-unit installation

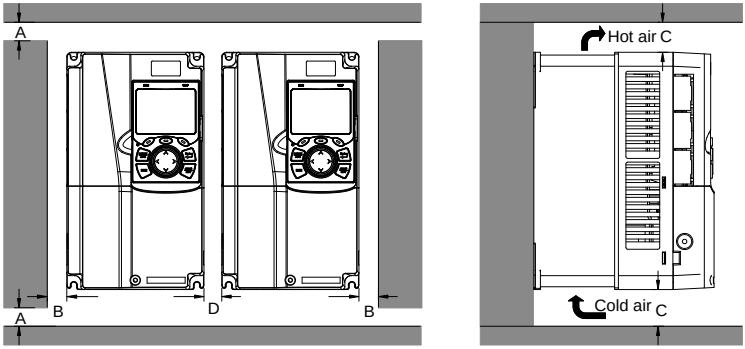

Figure 4–4 Parallel installation

Note:

- When you install VFDs in different sizes, align the top of each VFD before installation for the convenience of future maintenance.
- The min. dimension of A, B, D and C is 100mm.

4.2.6 Vertical installation

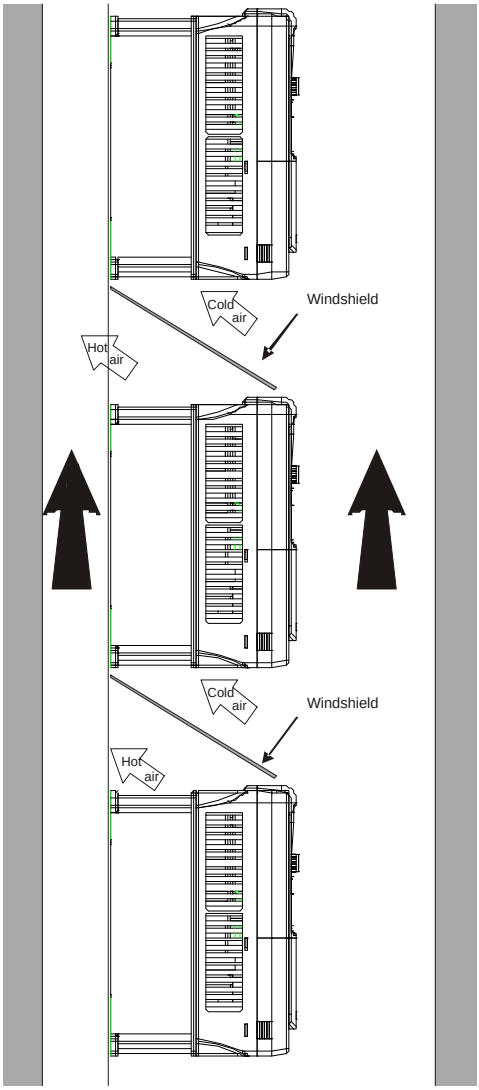

Figure 4–5 Vertical installation

Note: During vertical installation, you must install windshield, otherwise, the VFD will experience mutual interference, and the heat dissipation effect will be degraded.

4.2.7 Tilted installation

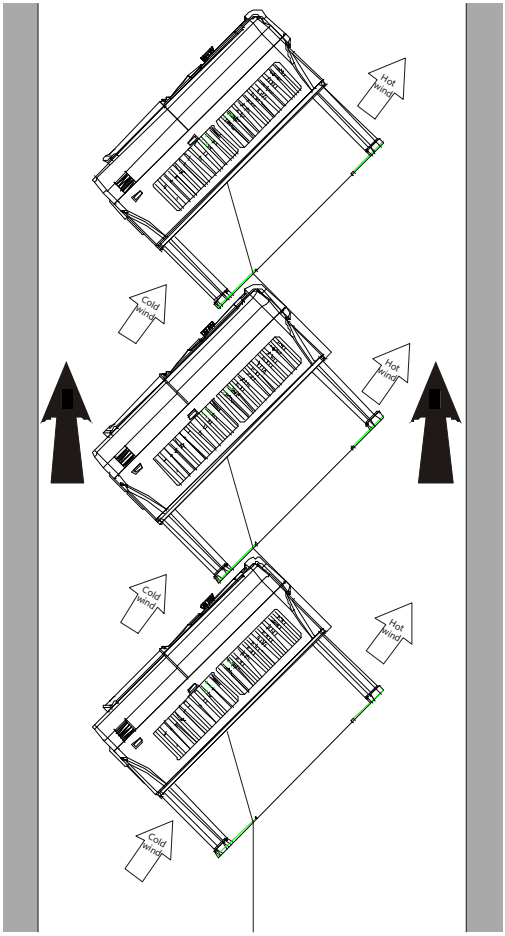

Figure 4–6 Tilted installation

Note: During tilted installation, it is a must to ensure the air inlet duct and air outlet duct are separated from each other to avoid mutual interference.

4.3 Main circuit standard wiring

4.3.1 Main circuit wiring diagram

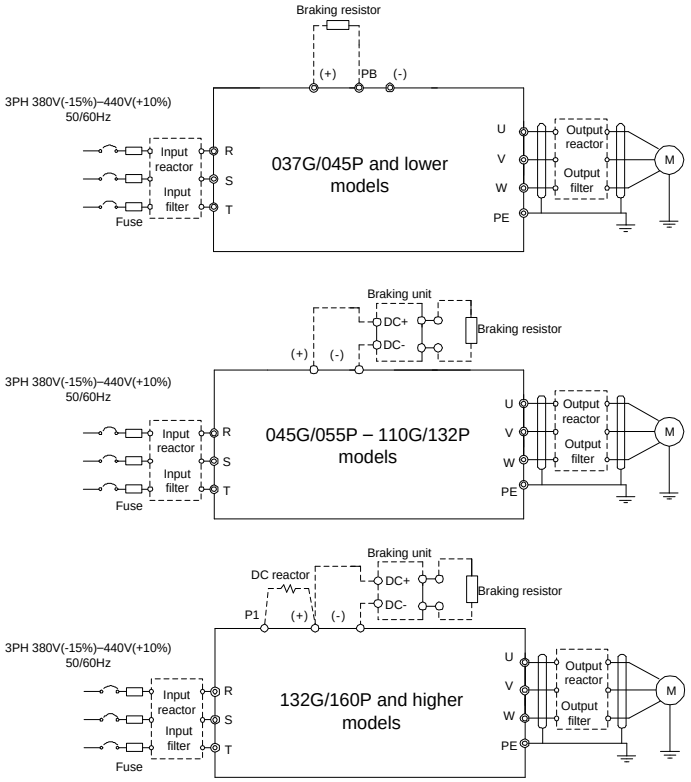

Figure 4–7 Main circuit wiring diagram

Note:

- The fuse, DC reactor, braking unit, braking resistor, input reactor, input filter, output reactor and output filter are optional parts. See Appendix D Optional peripheral accessories.
- P1 and (+) have been short connected by default for 132G/160P and higher models. If you need to connect to external DC reactor, take off the short-contact tag of P1 and (+).
- When connecting the braking resistor, take off the yellow warning sign marked with PB, (+) and (-) on the terminal block before connecting the braking resistor wire, otherwise, poor contact may occur.
- Braking units are optional parts for 045G/055P–055G/075P models, and they can be built in or externally connected to the models.

4.3.2 Main circuit terminal diagram

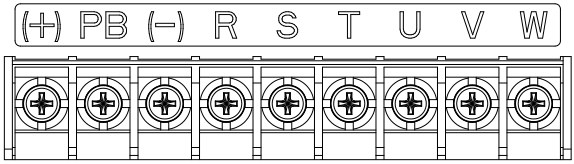

Figure 4–8 Main circuit terminal diagram for 022G/030P and lower models

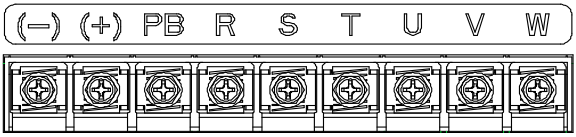

Figure 4–9 Main circuit terminal diagram for 030G/037P–037G/045P models

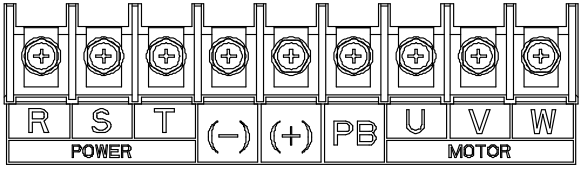

Figure 4–10 Main circuit terminal diagram for 045G/055P–110G/0132P (optional built-in braking unit means starting PB)

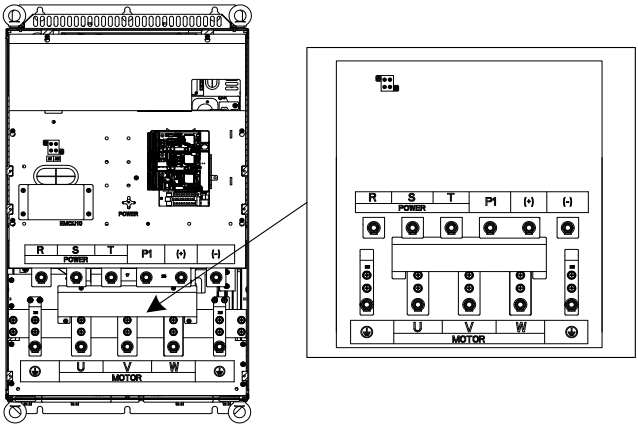

Figure 4–11 Main circuit terminal diagram for 132G/160P–200G/220P models

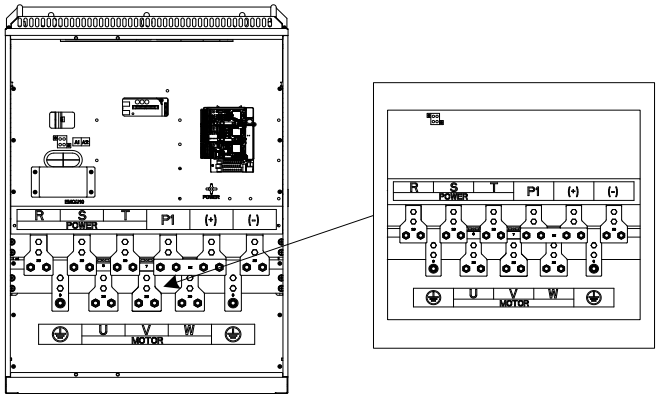

Figure 4–12 Main circuit terminal diagram for 220G/250P–315G/355P models

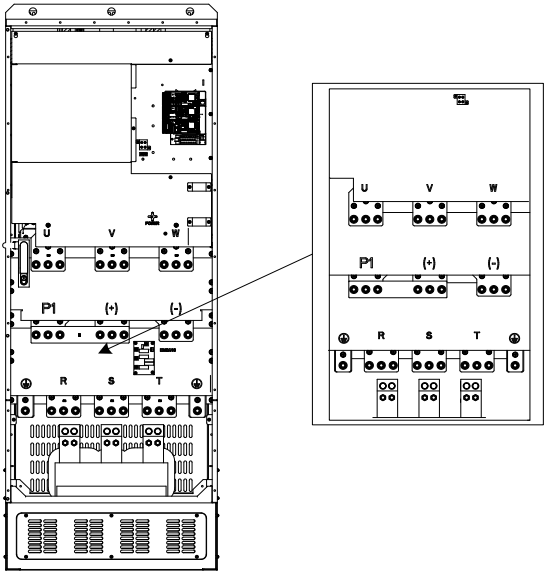

Figure 4–13 Main circuit terminal diagram for 355G/400P–500G models

<table>
<tr><th rowspan="2">Sign</th><th colspan="3">Terminal</th><th rowspan="2">Function description</th></tr>
<tr><th>037G/045P and lower</th><th>045G/055P–110G/132P</th><th>132G/160P and higher</th></tr>
<tr><td>R, S, T</td><td colspan="3">Main circuit power input</td><td>3PH AC input terminal, connected to the grid.</td></tr>
<tr><td>U, V, W</td><td colspan="3">VFD output</td><td>3PH AC output terminal, connected to the motor in most cases.</td></tr>
<tr><td>P1</td><td>Not available</td><td>Not available</td><td>DC reactor terminal 1</td><td rowspan="3">P1 and (+) connect to external DC reactor terminals.
(+) and (-) connect to external braking unit terminals.
PB and (+) connect to external braking resistor terminals.</td></tr>
<tr><td>(+)</td><td>Braking resistor terminal 1</td><td>Braking unit terminal 1
Braking resistor terminal 1</td><td>DC reactor terminal 2
Braking unit terminal 1</td></tr>
<tr><td>(-)</td><td>/</td><td colspan="2">Braking unit terminal 2</td></tr>
<tr><td>PB</td><td>Braking resistor terminal 2</td><td>Braking resistor terminal 2</td><td>Not available</td><td></td></tr>
<tr><td>PE</td><td colspan="3">Grounding resistor less than 10Ω</td><td>Grounding terminal for safe protection; each machine must carry two PE terminals and proper grounding is required.</td></tr>
</table>

Note:

- It is not recommended to use asymmetrical motor cables. If there is a symmetrical grounding conductor in the motor cable besides the conductive shielded layer, ground the grounding conductor on the VFD end and motor end.
- Braking resistor, braking unit and DC reactor are optional parts.
- Route the motor cables, input power cables and control cables separately.
- "Not available" means this terminal is not for external connection.
- GD series VFDs cannot share the DC bus with CH series VFDs.
- When sharing the DC bus, the VFDs must be the same in power and must be simultaneously powered on or off.
- In shared DC bus running mode, current balance on the VFD input side must be considered during wiring, and equalizing reactors are recommended to be configured.
- The PB is available for the 045G/055P–110G/132P models only when built-in braking units have been selected for the 045G/055P–055G/75P models.

4.3.3 Wiring procedure of the main circuit terminals

1. Connect the ground wire of the input power cable to the PE terminal of the VFD, connect the 3PH input cable to the R, S and T terminals, and tighten up.
2. Connect the ground wire of the motor cable to the PE terminal of the VFD, connect the motor 3PH cable to the U, V and W terminals, and tighten up.
3. Connect optional parts such as the braking resistor that carries cables to designated positions.
4. Fasten all the cables outside the VFD mechanically if allowed.

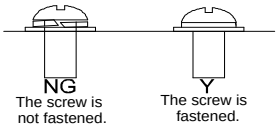

Figure 4–14 Screw installation diagram

4.4 Control circuit standard wiring

4.4.1 Basic control circuit wiring diagram

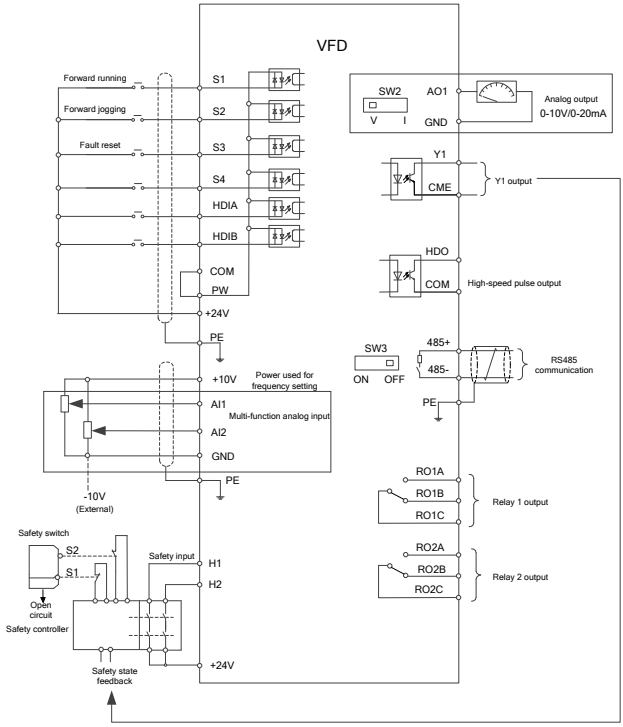

Figure 4–15 Control circuit wiring diagram

Terminal name	Description	
+10V	Locally provided +10.5V power supply	
AI1	● Input range: AI1 voltage/current can choose 0–10V / 0–20mA; AI2: -10V – +10V; ● Input impedance: 20kΩ during voltage input; 250Ω during current input; ● Whether the input is voltage or current is set through P05.50; ● Resolution ratio: When 10V corresponds to 50Hz, the min. resolution ratio is 5mV; ● Deviation: ±0.5% at 25°C, when input is above 5V/10mA.	
AI2		
GND	Reference ground of +10.5V	
AO1	● Output range: 0–10V or 0–20mA ● Whether the output is voltage or current is set through the switch SW2 ● Deviation: ±0.5% at 25°C, when input is above 5V/10mA.	
RO1A	● RO1 relay output; RO1A is NO, RO1B is NC, RO1C is common terminal ● Contact capacity: 3A/AC250V, 1A/DC30V	
RO1B		
RO1C		
RO2A	● RO2 relay output; RO2A is NO, RO2B is NC, RO2C is common terminal ● Contact capacity: 3A/AC250V, 1A/DC30V	
RO2B		
RO2C		
HDO	● Switch capacity: 50mA/30V ● Range of output frequency: 0–50kHz ● Duty ratio: 50%	
CME	Common terminal of open collector output; short connected to COM by default	
Y1	Switch capacity: 50mA/30V Range of output frequency: 0–1kHz	
485+	RS485 communication port, RS485 differential signal port and standard RS485 communication port must use shielded twisted pair; the 120ohm terminal matching resistor of RS485 communication is connected by the switch SW3.	
485-		
PE	Grounding terminal	
PW	External power input terminal for digital input circuits Voltage range: 12–30V	
24V	User power provided by the VFD, maximum output current 200mA.	
COM	Reference ground of +24V	
S1	Digital input 1	● Internal impedance: 3.3kΩ ● Accept 12–30V voltage input ● Bi-directional input terminal, supporting NPN/PNP connection modes ● Max. input frequency: 1kHz ● All are programmable digital input terminals, the functions of which be set through function codes
S2	Digital input 2	
S3	Digital input 3	
S4	Digital input 4	
HDIA	● Channels for both high frequency pulse input and S1–S4 function inputs ● Max. input frequency: 50kHz;	

Terminal name	Description	
HDIB	● Duty ratio: 30%–70%; ● Supporting 24V-power quadrature encoder input; equipped with speed-measurement function	
+24V—H1	STO input 1	● Safe torque off (STO) redundant input, connected to the external NC contact. When the contact opens, STO acts and the VFD stops output; ● Safety input signal wires use shielded wires whose length is within 25m; ● The H1 and H2 terminals are short connected to +24V by default. Remove the short connectors from the terminals before using STO function.
+24V—H2	STO input 2	

4.4.2 Input/output signal connection diagram

You can select the NPN/PNP mode and internal/external power through the U-type short connector. PNP internal mode is adopted by default.

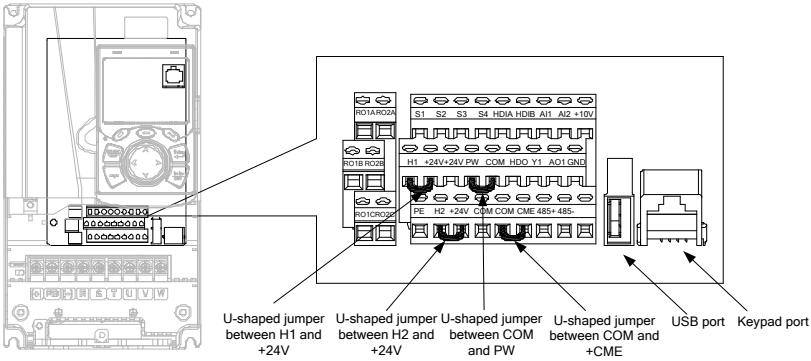

Figure 4–16 Position of U-type short connector

Note: The USB port can be used to upgrade the software, and the keypad port can be used to connect an external keypad. The external keypad cannot be used when the keypad of the VFD is used.

If input signal comes from NPN transistors, set the U-type short connector between +24V and PW based on the power used according to the following figure.

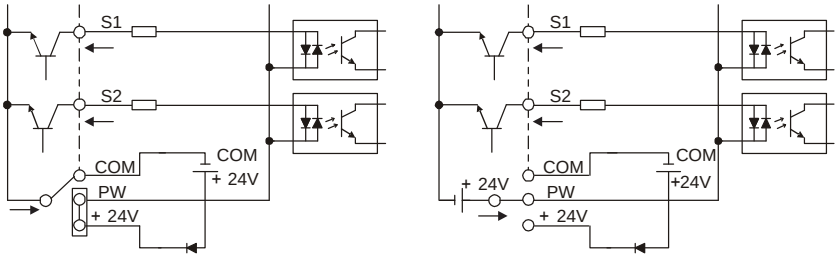

Internal power（NPN mode） External power（NPN mode）

Figure 4–17 NPN mode

If input signal comes from PNP transistor, set the U-type short connector based on the power used according to the following figure.

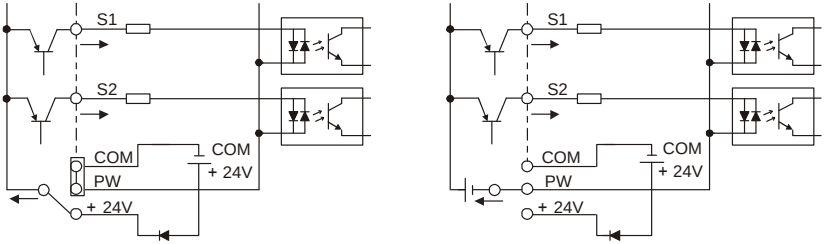

Internal power（PNP mode） External power（PNP mode）

Figure 4–18 PNP mode

4.5 Wiring protection

4.5.1 Protecting the VFD and input power cable in short circuit

The VFD and input power cable can be protected during short-circuit to avoid thermal overload.

Carry out protective measures according to the following requirements.

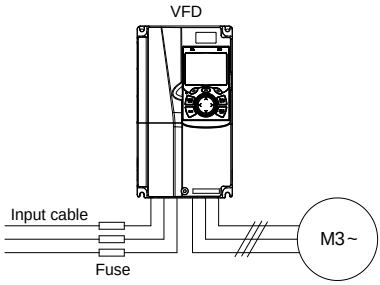

Figure 4–19 Fuse configuration

Note: Select the fuse according to operation manual. During short-circuit, the fuse will protect input power cables to avoid damage to the VFD; when internal short-circuit occurred to the VFD, it can

protect neighboring equipment from being damaged.

4.5.2 Protecting the motor and motor cable in short circuit

If the motor cable is selected according to the VFD rated current, the VFD can perform short-circuit protection for the motor and motor cable, without the use of other protective devices.

	✧ If the VFD is connected to multiple motors, an additional thermal overload switch or breaker must be used to protect the motor and motor cable. Such a device may use the fuse to cut off the short-circuit current.

4.5.3 Protecting the motor from thermal overload

According to the requirements, the motor must be protected to prevent thermal overload. Once overload is detected, you must cut off the current. The VFD is equipped with motor thermal overload protection function, which will block output and cut off the current (if necessary) to protect the motor.

4.5.4 Bypass connection

In critical occasions, power-variable frequency conversion circuit is necessary to ensure proper operation of the system when VFD fault occurs. In some special cases, for example, only soft startup is needed, it will convert to power-frequency operation directly after soft startup, corresponding bypass link is also needed.

	✧ Do not connect the power supply to the VFD output terminals U, V and W. The voltage applied to the motor cable may cause permanent damage to the VFD.

If frequent switchover is needed, you can use the switch/contactor which carries mechanical interlock to ensure motor terminals are not connected to input power cables and VFD output ends simultaneously.

5 Basic operation guidelines

5.1 What this chapter contains

This chapter describes how to operate the VFD by using the keypad.

5.2 Keypad introduction

The VFD has been equipped with the LCD keypad as a standard configuration part. You can use the keypad to control the start and stop, read status data, and set parameters of the VFD.

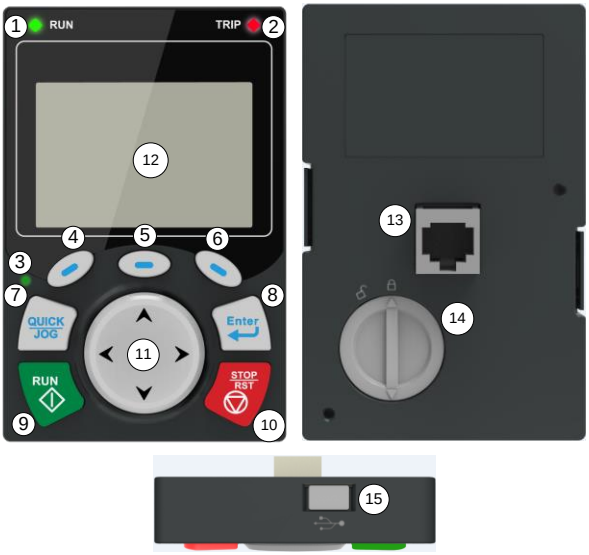

Figure 5–1 Keypad diagram

Note:

- The LCD keypad is equipped with a real-time clock, which can run properly after being installed with batteries even if the power line is disconnected. The clock battery (type: CR2032) is user purchased.
- The LCD keypad has the parameter copying function.
- If you need install the keypad on another position rather than on the VFD, use M3 screws or a keypad installation bracket for fixing, and use a keypad extension cable with a standard RJ45 crystal head.

Item	Description		
Status indicator	1	RUN	VFD running status indicator. LED off: The VFD is stopped. LED blinking: The VFD is autotuning

Item	Description			
				parameters. LED on: The VFD is running.
	2	TRIP		Fault indicator. LED on: in fault state LED off: in normal state LED blinking: in pre-alarm state
	3	QUICK/JOG		Short-cut key indicator, which displays different state under different functions, see definition of the QUICK/JOG key for details.
Key area	4		Function key	The function of function key varies with the menu; The function of function key is displayed in the footer.
	5			
	6			
	7		Short-cut key	Re-definable. It is defined as JOG function by default, namely jogging. The function of short-cut key can be set by the ones of P07.12, as shown in the following. 0: No function 1: Jogging (linkage indicator 3; logic : NO); 2: Reserved 3: FWD/REV switch-over (linkage indicator 3; logic: NC) 4: Clear UP/DOWN setting (linkage indicator 3 logic: NC) 5: Coast to stop (linkage indicator 3; logic: NC) ; 6: Switching running command reference mode in order (linkage indicator 3; logic: NC) 7: Reserved **Note:** After restoring to default values, the default function of short-cut key 7 is 1.
	8		Confirmation key	The function of the confirmation key varies with menus, such as confirming parameter setting, confirming parameter selection, and entering the next menu.

Item	Description			
	9		Run key	When the VFD is controlled by the keypad, this key is used to run the VFD or perform autotuning.
	10		Stop/ Reset key	In running state, pressing this key can stop running or autotuning; this key is limited by P07.04. In fault alarm state, all the control modes can be reset by this key.
	11		Direction key Up: Down: Left: Right:	Up: Its function varies with the interface (Example: shifting up the displayed/selected item and changing digits) Down: Its function varies with the interface (Example: shifting down the displayed/selected item and changing digits) Left: Its function varies with the interface (Example: switching the monitoring interface, shifting the cursor leftward, and returning to the previous menu) Right: Its function varies with the interface (Example: switching the monitoring interface, shifting the cursor rightward, and entering the next menu)
Display area	12	LCD	Display screen	240*160 dot-matrix LCD, able to display three monitoring parameters or six sub-menu items simultaneously.
Other	13	RJ45 interface	RJ45 interface	The RJ45 interface is used to connect to the VFD.
	14	Battery cover	Clock battery cover	To replace or mount the clock battery, remove this cover, and then close the cover after the battery is mounted.
	15	USB terminal	Mini USB terminal	The mini USB terminal is used to connect to the USB flash drive through an adapter.

The LCD has different display areas, which show different contents under different interfaces. The following figure shows the main interface in stop state.

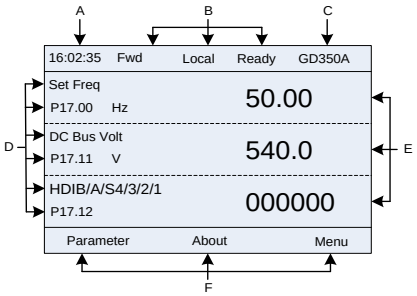

Figure 5–2 Main interface of LCD

Area	Name	Displayed contents
Header A	Real-time display area	Display the real-time; clock battery is not included; the time needs to be reset when powering on the VFD.
Header B	VFD running state display area	Display the running state of the VFD: 1. Display motor rotating direction: "Fwd" – Run forward during operation; Rev – Run reversely during operation; "Disrev" – Reverse running is forbidden. 2. Display VFD running command channel: "Local" – Keypad; "Trml" – Terminal; "Remote" - Communication 3. Display current VFD state: "Ready" – The VFD is in stop state (no fault); "Run" – The VFD is in running state; "Jog" – The VFD is in jogging state; "Pre-alarm" – the VFD is under pre-alarm state during running; "Fault" – VFD fault occurred.
Header C	VFD model display area	VFD model display: "GD350A" – current VFD is GD350A series VFD
Display D	Parameter names and function codes on the VFD homepage	Display a maximum of three parameter names and function codes on the homepage. The parameters displayed on the homepage can be managed.
Display E	Values of parameters on the VFD homepage	Display the values of parameters on the VFD homepage, which are updated in real time.
Footer F	Corresponding menus of function keys (4), (5) and (6)	Indicate the menus corresponding to function keys (4), (5) and (6). The corresponding menus of the keys vary with interfaces, and the content displayed in this area varies also.

5.3 Keypad display

The VFD keypad can display the stopped-state parameters, running-state parameters, function parameter editing status, and fault alarm status.

5.3.1 Displaying stopped-state parameters

When the VFD is in stopped state, the keypad displays stopped state parameters, and this interface is the main interface during power-on by default. In stopped state, parameters in various states can be displayed. Press or to shift the displayed parameters upward or downward.

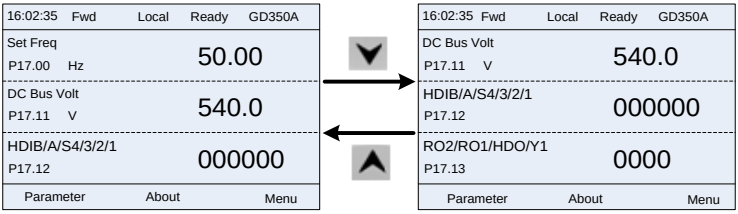

Figure 5–3 Stopped-state parameter display 1

Press or to switch between different display styles, including list display style and progress bar display style.

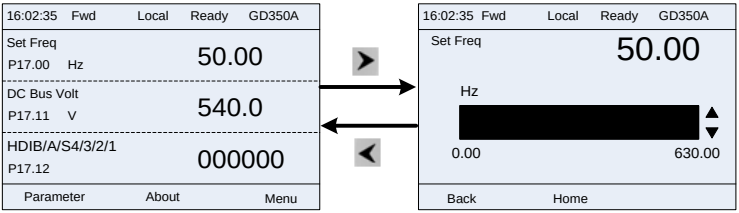

Figure 5–4 Stopped-state parameter display 2

The stopped-state parameter display list is user defined, and each state variable function code can be added to the stopped-state parameter display list as needed. A function code which has been added to the stopped-state parameter display list can also be deleted or shifted.

5.3.2 Displaying running-state parameters

After receiving a valid running command, the VFD will enter running state, and the keypad displays running state parameter with RUN indicator on the keypad turning on. Under running state, multiple kinds of state parameters can be displayed. Press or to shift up or down.

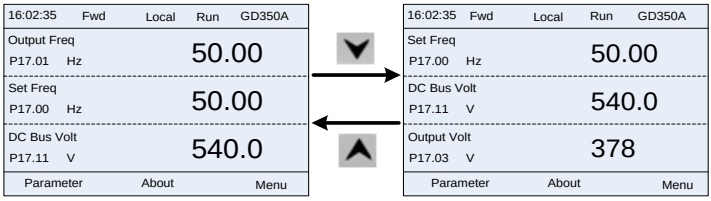

Figure 5–5 Running state parameters

Press or to switch between different display styles, including list display style and progress bar display style.

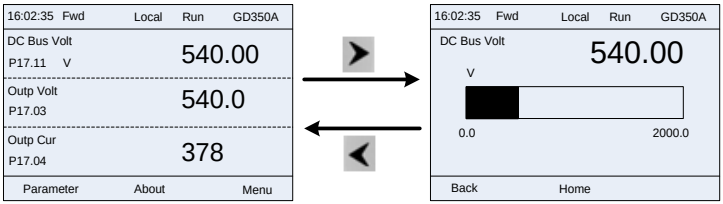

Figure 5–6 Running parameter display state

In running state, multiple kinds of state parameters can be displayed. The running display parameter list is user defined, and each state variable function code can be added to the running display parameter list as needed. A function code which has been added to the running display parameter list can also be deleted or shifted.

5.3.3 Displaying fault information

The VFD enters fault alarm display state once fault signal is detected, and the keypad displays fault code and fault information with TRIP indicator on the keypad turning on. Fault reset operation can be carried out via STOP/RST key, control terminal or communication command.

The fault code will be kept displaying until fault is removed.

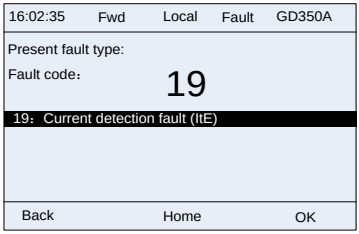

Figure 5–7 Displaying a fault

5.4 Operating the VFD through the keypad

You can perform various operations on the VFD by using the keypad, including entering/exiting menus, parameter selection, list modification and parameter addition.

5.4.1 Entering/exiting menus

The keypad displays three main menus at the home interface by default: **Parameter**, **About**, and **Menu**. The following figure shows how to enter the **Parameter** main menu and how to operate under this main menu.

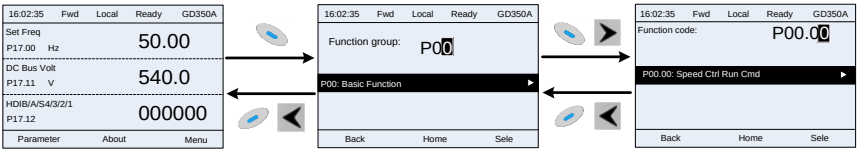

Figure 5–8 Enter/exit menu diagram 1

The following figure shows how to enter the **Menu** main menu and operate under this main menu.

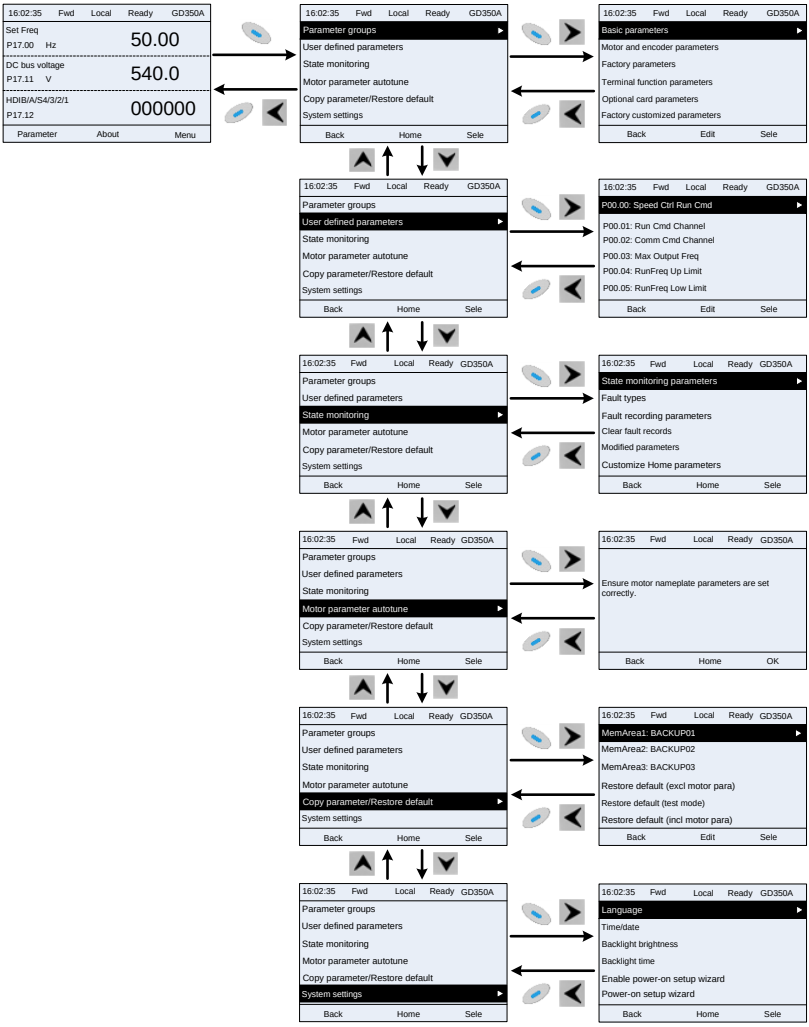

Figure 5–9 Enter/exit menu diagram 2

The keypad menu setup is shown in the following.

Level 1	Level 2	Level 3	Level 4
Parameter groups	Basic parameters	P00: Basic Function	P00.xx
		P01: Start/stop control	P01.xx
		P03: Motor1 Vector Ctrol	P03.xx
		P04: V/F Control	P04.xx
		P07: HMI	P07.xx
		P08: Enhanced Function	P08.xx
		P09: PID Control	P09.xx
		P10: PLC&Mul-stepSpCtrl	P10.xx
		P11: Protection Param	P11.xx
		P13: SM Ctrl Param	P13.xx
		P14: Serial Comm Func	P14.xx
		P21: Position Ctrl	P21.xx
		P22: Spdl Positioning	P22.xx
		P23: Motor 2 Vector Ctrl	P23.xx
	Motor and encoder parameters	P02: Motor 1 Param	P02.xx
		P12: Motor 2 Param	P12.xx
		P20: Motor 1 Encoder	P20.xx
		P24: Motor 2 Encoder	P24.xx
	Factory parameters	P99: Factory Func	P99.xx
	Terminal function parameters	P05: Input Terminals	P05.xx
		P06: Output Terminals	P06.xx
		P98: AIAO Calibration	P98.xx
	Optional card parameters	P15: Comm Ex-card 1	P15.xx
		P16: Comm Ex-card 2	P16.xx
		P25: Ex I/OCard InpFunc	P25.xx
		P26: Ex I/OCard OutpFunc	P26.xx
		P27: PLC Func	P27.xx
		P28: Master/slave Ctrl	P28.xx
	Factory customized parameters	P90: Tension control speed mode	P90.xx
		P91: Tension control torque	P91.xx
		P92: Tension control optimization	P92.xx

Level 1	Level 2	Level 3	Level 4
User defined parameters	/	/	Pxx.xx ...
State monitoring	State monitoring parameters	P07: HMI	P07.xx
		P17: State Viewing Func	P17.xx
		P18: CI-IpCtrlStateView	P18.xx
		P19: Ex-card StateView	P19.xx
		P93: Tension control state viewing func	P93.xx
	Fault types	/	P07.27: TypeofLatelyFault
			P07.28: Typeof1stLastFault
			P07.29: Typeof2ndLastFault
			P07.30: Typeof3rdLastFault
			P07.31: Typeof4thLastFault
			P07.32: Typeof5thLastFault
	Fault recording parameters	/	P07.33: RunFreq atLatelyFault ... P07.xx: xx state of fault xx
	Clear fault records	/	Sure to clear fault records?
	Modified parameters	/	Pxx.xx: Modified parameter 1
			Pxx.xx: Modified parameter 2
			Pxx.xx: Modified parameter xx
	Customize Home parameters	Stopped-state parameters	/
		Running-state parameters	/
Motor parameter autotune	/	Ensure motor nameplate parameters are set correctly.	Complete para rotary autotune
			Complete para static

Level 1	Level 2	Level 3	Level 4
			autotune
			Partial para static autotune
			Complete para rotary autotune 2 (for AM)
			Partial para static autotune 2 (for AM)
Copy parameter/Restore default	/	MemArea1: BACKUP01	Upload local func para to keypad
			Download all func para from keypad
			Download NonMotor func para from keypad
			Download motor func para from keypad
		MemArea2: BACKUP012	Upload local func para to keypad
			Download all func para from keypad
			Download NonMotor func para from keypad
			Download motor func para from keypad
		MemArea3: BACKUP03	Upload local func para to keypad
			Download all func para from keypad
			Download NonMotor func para from keypad
			Download motor func para from keypad
		Restore default (excl motor para)	Sure to restore defaults (excl motor para)?
		Restore default (test mode)	Sure to restore default (test mode)?
		Restore default (incl motor para)	Sure to restore default (incl motor para)?
System settings	/	/	Language
			Time/date

Level 1	Level 2	Level 3	Level 4
			Backlight brightness
			Backlight time
			Enable power-on setup wizard
			Power-on setup wizard
			Keypad programming
			Fault time setting
			Control board programming
			Up/Down key sensitivity

5.4.2 Editing a parameter list

The parameters in the parameter list in stopped state can be added as needed (through the menu of user defined home parameters), and the list can also be edited such as "Move up", "Move down", "Delete from the list", and "Restore default". The edit function is shown in the following.

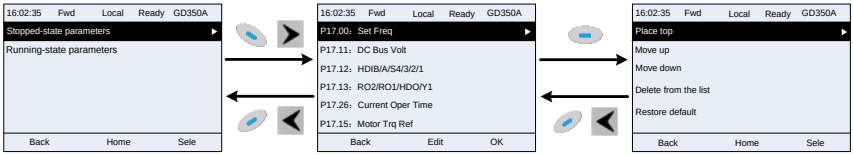

Figure 5–10 List edit diagram 1

Press key to enter edit interface, select the operation needed, and press key, key or Enter key to confirm the edit operation and return to the previous menu (parameter list), the returned list is the list edited. If key or key is pressed in edit interface wihouth selecting edit operation, it will return to the previous menu (parameter list remain unchanged).

Note: For the parameter objects in the list header, move-up operation will be invalid, and the same principle can be applied to the parameter objects in the list footer; after deleting a certain parameter, the parameter objects under it will be moved up automatically.

The items in the parameter list in running state can be added as needed (through the menu of user defined home parameters), and the list can also be edited such as "Place top", "Move up", "Move down", "Delete from the list", and "Restore default parameters". The edit function is shown in the interface below.

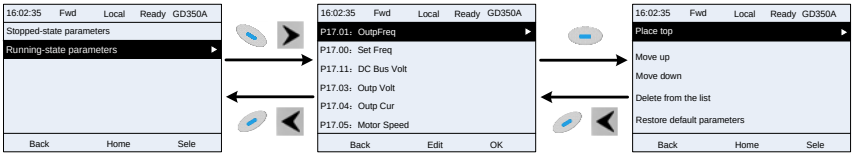

Figure 5–11 List edit diagram 2

The parameters of user defined parameter setting can be added, deleted or adjusted as needed, such as "Place top", "Move up", "Move down", "Delete from the list", and "Restore default parameters"; the adding function can be set in a certain function code in a function group. The edit function is shown in the figure below.

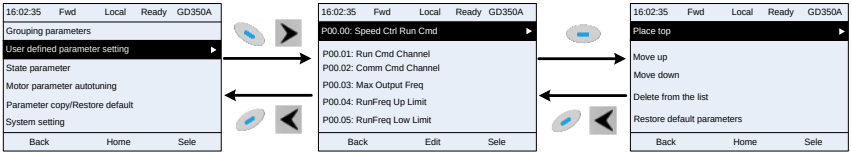

Figure 5–12 List edit diagram 3

5.4.3 Adding parameters to the parameter list displayed in stopped/running state

You can choose **Menu** > **State monitoring**, choose a submenu, and enter a specific function group and then a specific function code to add the parameter to the list of parameters displayed in stopped state or parameters displayed in running state.

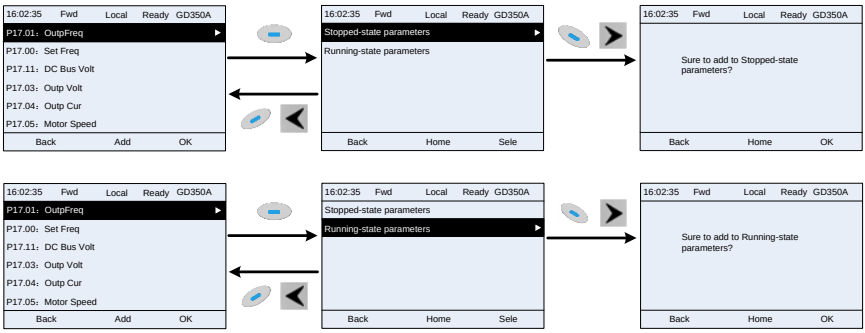

Figure 5–13 Adding parameter diagram 1

After selecting a specific function code, press key to enter parameter addition interface, and press key, key or Enter key to confirm the addition operation. If this parameter is not included in the list of parameters displayed in stopped state or list of parameters displayed in running state, the parameter added will be at the end of the list; if the parameter is already in the list of parameters displayed in stopped state or list of parameters displayed in running state, the addition

operation will be invalid. If key or key is pressed without selecting addition operation in "Addition" interface, it will return to monitoring parameter list menu.

Part of the monitoring parameters in P07 HMI group can be added to the "parameter displayed in stop state" list or "parameter displayed in running state" list; all the parameters in P17, P18 and P19 group can be added to the "parameter displayed in stop state" list or "parameter displayed in running state" list.

Up to 16 monitoring parameters can be added to the list of parameters displayed in stopped state; and up to 32 monitoring parameters can be added to the list of parameters displayed in running state.

5.4.4 Adding parameters to the user defined parameter list

You can choose **Menu** > **Parameter groups**, choose a submenu, and enter a specific function group and then a specific function code to add the parameter to the user defined parameter list.

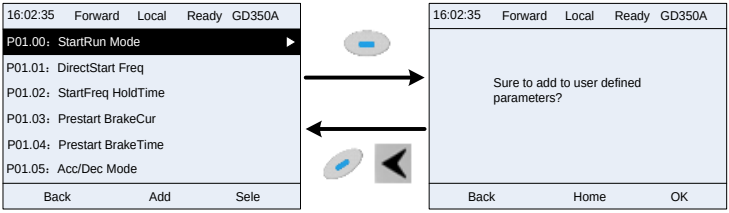

Figure 5–14 Adding parameter diagram 2

Press key to enter addition interface, and press key, key or key to confirm the addition operation. If this parameter is not included in the original user defined parameter list, the newly-added parameter will be at the end of the list; if this parameter is already in the user defined parameter list, the addition operation will be invalid. If key or key is pressed without selecting addition operation, it will return to parameter setup list menu.

All the function code groups under the submenu can be added to user defined parameter list. Up to 64 function codes can be added to the user defined parameter list.

5.4.5 Editing user defined parameters

After accessing a specific function code under the **User defined parameters** menu, you can press the key, key or key to enterthe parameter edit interface. After entering the edit interface, the present value is highlighted. Press the key and key to edit the parameter value, and the corresponding parameter item of current value will be highlighted automatically. After the edit operation is completed, press or key to save the selected parameter and return to the previous menu; or press key to maintain the value and return to the previous menu.

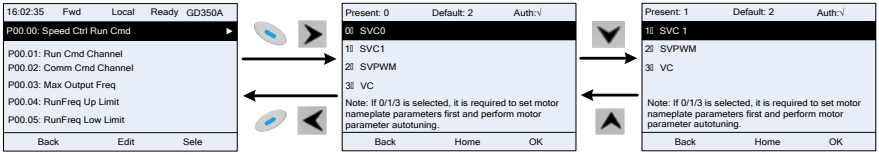

Figure 5–15 Editing user defined parameters

In the interface, the "Auth" field on the top right indicates whether this parameter is editable or not.

" √ " indicates the set value of this parameter can be modified under the present state.

"×" indicates the set value of this parameter cannot be modified under the present state.

"Present" indicates the present value.

"Default" indicates the default value of this parameter.

5.4.6 Editing parameters in parameter groups

You can choose **Menu** > **Parameter groups**, enter a specific function group and then a specific function code, and then press key, key or key to edit the parameter setting interface. After entering edit interface, set the parameter from low bit to high bit, and the bit under setting will be highlighted. Press key or key to increase or decrease theparameter value (this operation is valid until the parameter value exceeds the max. value or min. value); press or to shift the editing bit. After parameters are set, press or key to save the set parameters and return to the previous menu; press to maintain the original parameter value and return to the previous menu.

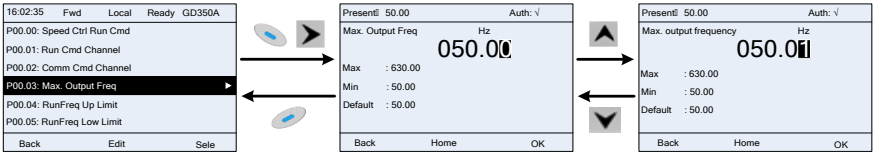

Figure 5–16 Editing parameters in parameter groups

In the parameter edit interface, the "Auth" field on the top right indicates whether this parameter can be modified or not.

" √ " indicates the set value of this parameter can be modified under the present state.

"×" indicates the set value of this parameter cannot be modified under the present state.

"Present" indicates the present value.

"Default" indicates the default value of this parameter.

5.4.7 Monitoring states

You can choose **Menu** > **State monitoring** > **State monitoring parameter**, enter a specific function group and then a specific function code, and press key, key or key to enter the state monitoring interface. After entering the state monitoring interface, the actual parameter value will

be displayed in real time, this value is the actually detected value which cannot be modified.

In the state monitoring interface, you can press key or key to return to the previous menu.

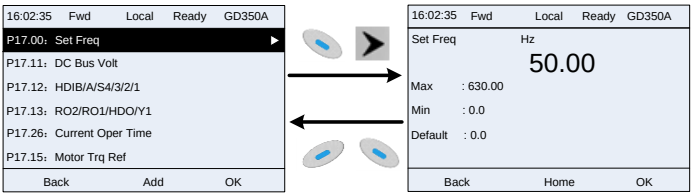

Figure 5–17 State monitoring interface

5.4.8 Autotuning motor parameters

You can choose **Menu** > **Motor parameter autotune** and press key, key or key to enter motor parameter autotuning interface. However, before entering the motor parameter autotuning interface, you must set the motor nameplate parameters correctly. After entering the interface, select a motor autotuning type to carry out motor parameter autotuning. In motor parameter autotuning interface, you can press key or key to return to the previous menu.

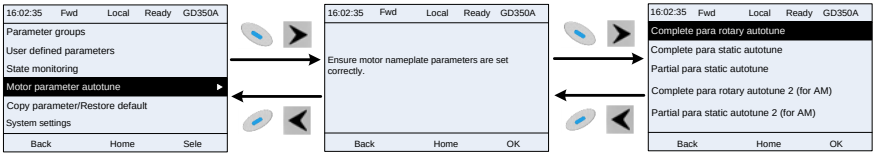

Figure 5–18 Selecting a parameter autotuning type

After selecting a motor autotuning type, enter motor parameter autotuning interface, and press RUN key to start motor parameter autotuning. After autotuning is done, a message will pop up indicating autotuning is succeeded, and then it will return to the main interface of stop. During autotuning, you can press STOP/RST key to terminate autotuning; if any fault occur during autotuning, the keypad will display a fault interface.

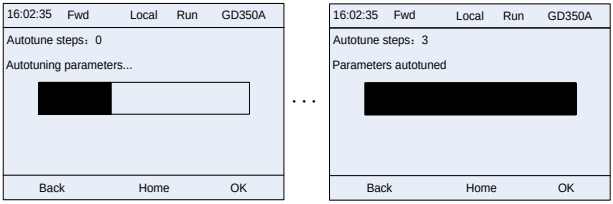

Figure 5–19 Parameter autotuning

5.4.9 Backing up parameters

You can choose **Menu** > **Copy parameter/Restore default**, and press key, key or key to enter the function parameter backup interface and function parameter restoration interface to upload/download VFD parameters, or restore VFD parameters to default values. The keypad has three different storage areas for parameter backup, and each storage area can save the parameters of one VFD, which means the keypad can save parameters of three VFDs in total.

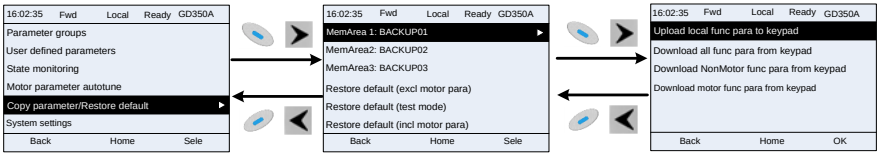

Figure 5–20 Parameter backup

5.4.10 System setup

You can choose **Menu** > **System settings**, and press key, key or key to enter system setting interface to set the keypad language, time/date, backlight brightness, backlight time and restore parameters.

Note: Clock battery is not included, and the keypad time/date needs to be reset after power off. If time-keeping after power off is needed, you should purchase the clock batteries separately.

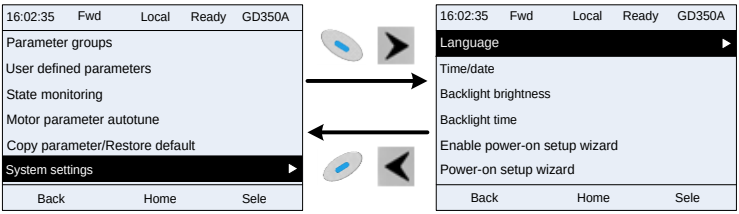

Figure 5–21 System setting diagram

5.4.11 Power-on setup wizard

The keypad supports the power-on setup wizard function, mainly for the first power-on situation, instructing you to enter the setting menu, and gradually implementing basic functions such as basic parameter setting, direction judgment, mode setting and autotuning.

For first power-on, the keypad automatically enters the setup wizard interface. See the following.

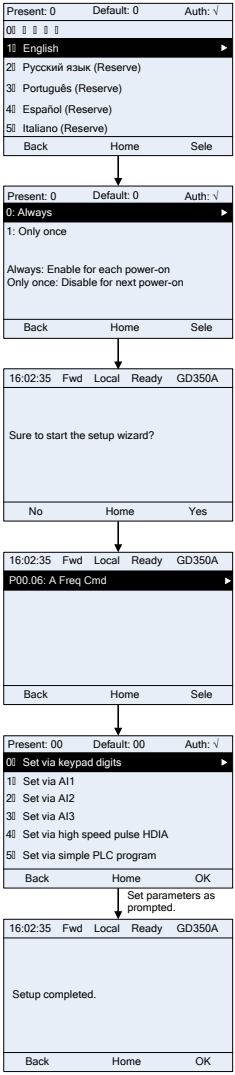

Figure 5–22 Power-up setup wizard

If you want to change the guiding settings, you can choose **Menu** > **System settings**, and then choose **Enable power-on setup wizard** or **Power-on setup wizard**, and then make changes.

5.5 Basic operations

5.5.1 What this section contains

This section introduces the function modules inside the VFD.

	✧ Ensure all the terminals are fixed and tightened firmly. ✧ Ensure the motor matches with the VFD power.

5.5.2 Common commissioning procedure

The common operation procedure is shown in the following (taking motor 1 as an example).

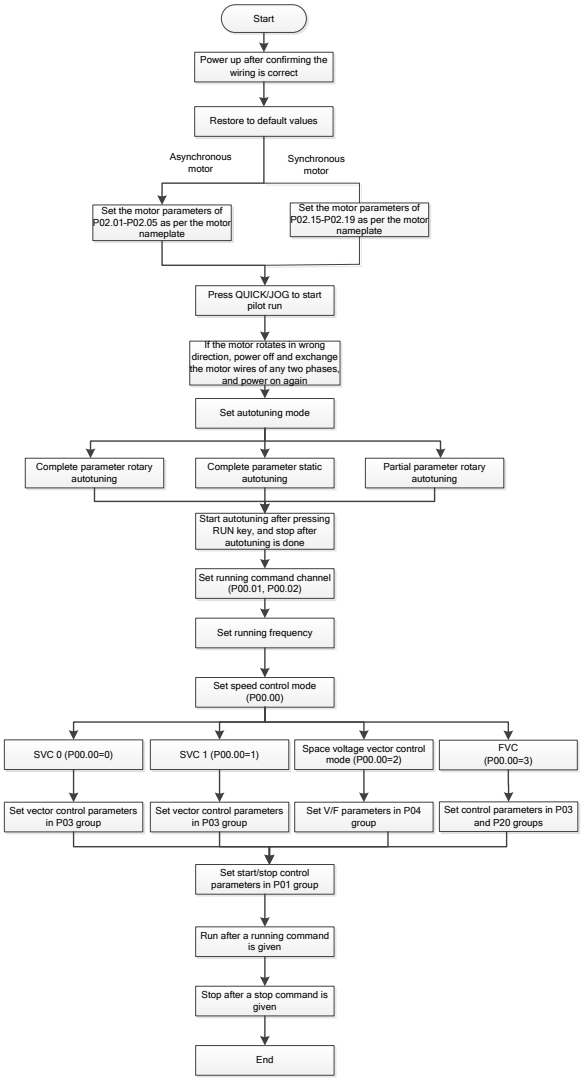

Note: If fault occurred, rule out the fault cause according to "fault tracking".

The running command channel can be set by terminal commands besides P00.01 and P00.02.

Current running command channel P00.01	Multi-function terminal function (36) Command switches to keypad	Multi-function terminal function (37) Command switches to terminal	Multi-function terminal function (38) Command switches to communication
Keypad	/	Terminal	Communication
Terminal	Keypad	/	Communication
Communication	Keypad	Terminal	/

Note: "/" means this multi-function terminal is invalid under current reference channel.

Related parameter list:

Function code	Name	Description	Default
P00.00	Speed control mode	0: Sensorless vector control (SVC) mode 0 1: Sensorless vector control (SVC) mode 1 2: Space voltage vector control mode 3: FVC **Note:** To select 0, 1, or 3 as the control mode, enable the VFD to perform motor parameter autotuning first.	2
P00.01	Channel of running commands	0: Keypad 1: Terminal 2: Communication	0
P00.02	Communication mode of running commands	0: Modbus/Modbus TCP 1: PROFIBUS/CANopen/DeviceNet 2: Ethernet 3: EtherCAT/PROFINET/EtherNet IP 4: Programmable card 5: Wireless communication card 6: Reserved	0
P00.15	Motor parameter autotuning	0: No operation 1: Complete parameter rotary autotuning 2: Complete parameter static autotuning 3: Partial parameter static autotuning 4: Complete parameter rotary autotuning 2 (AM) 5: Partial parameter static autotuning 2 (AM)	0
P00.18	Function parameter restore	0: No operation 1: Restore default values (excluding motor parameters)	0

Function code	Name	Description	Default
		2: Clear fault records 3: Lock keypad parameters 4: Reserved 5: Restore default values (for factory test mode) 6: Restore default values (including motor parameters) **Note:** After the selected operation is done, this parameter is automatically restored to 0. Restoring the default values may delete the user password. Exercise caution when using this function. The option 5 can be used only for factory testing.	
P02.00	Type of motor 1	0: Asynchronous motor (AM) 1: Synchronous motor (SM)	0
P02.01	Rated power of AM 1	0.1–3000.0kW	Model depended
P02.02	Rated frequency of AM 1	0.01Hz–P00.03 (Max. output frequency)	50.00Hz
P02.03	Rated speed of AM 1	1–60000rpm	Model depended
P02.04	Rated voltage of AM 1	0–1200V	Model depended
P02.05	Rated current of AM 1	0.8–6000.0A	Model depended
P02.15	Rated power of SM 1	0.1–3000.0kW	Model depended
P02.16	Rated frequency of SM 1	0.01Hz–P00.03 (Max. output frequency)	50.00Hz
P02.17	Number of pole pairs of SM 1	1–50	2
P02.18	Rated voltage of SM 1	0–1200V	Model depended
P02.19	Rated current of SM 1	0.8–6000.0A	Model depended
P05.01–P05.06	Function selection of multifunction digital input	36: Switch the running command channel to keypad 37: Switch the running command channel to	

Function code	Name	Description	Default
	terminals (S1–S4, HDIA, HDIB)	terminal 38: Switch the running command channel to communication	
P07.01	Reserved		
P07.02	QUICK/JOG key function selection	Range: 0x00–0x27 Ones place: Function of QUICK/JOG 0: No function 1: Jog 2: Reserved 3: Switch between forward and reverse rotating 4: Clear the UP/DOWN setting 5: Coast to stop 6: Switch command channels in sequence 7: Reserved Tens place: Reserved	0x01

5.5.3 Vector control

AMs feature high order, nonlinearity, strong coupling and multi-variables, which increase difficulty to control AMs during actual application. The vector control technology solves this situation as follows: measures and controls the stator current vector of the AM, and then decomposes the stator current vector into exciting current (current component that generates internal magnet field) and torque current (current component that generates torque) based on field orientation principle, and therefore controls the amplitude values and phase positions of the two components (namely, controls the stator current vector of the AM) to realize decoupled control on exciting current and torque current, thus achieving high-performance speed regulation of the AM.

The VFD uses the sensor-less vector control algorithm, which can be used to drive AMs and permanent-magnet SMs simultaneously. As the core algorithm of vector control is based on accurate motor parameter models, the accuracy of motor parameters affects vector control performance. It is recommended to enter accurate motor parameters and autotune motor parameters before executing vector control.

As the vector control algorithm is complicated, exercise caution before modifying vector control function parameters.

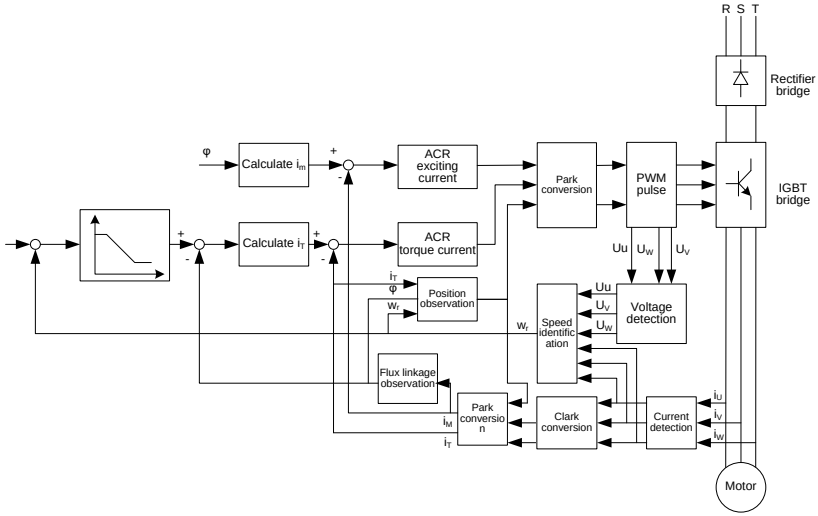

Function code	Name	Description	Default
P00.00	Speed control mode	0: Sensorless vector control (SVC) mode 0 1: Sensorless vector control (SVC) mode 1 2: Space voltage vector control mode 3: FVC **Note:** To select 0, 1, or 3 as the control mode, enable the VFD to perform motor parameter autotuning first.	2
P00.15	Motor parameter autotuning	0: No operation 1: Complete parameter rotary autotuning 2: Complete parameter static autotuning 3: Partial parameter static autotuning 4: Complete parameter rotary autotuning 2 (AM) 5: Partial parameter static autotuning 2 (AM)	0
P02.00	Type of motor 1	0: Asynchronous motor (AM) 1: Synchronous motor (SM)	0
P03.00	Speed-loop proportional gain 1	0–200.0	20.0
P03.01	Speed-loop integral time 1	0.000–10.000s	0.200s
P03.02	Low-point frequency for	0.00Hz–P03.05	5.00Hz

Function code	Name	Description	Default
	switching		
P03.03	Speed-loop proportional gain 2	0–200.0	20.0
P03.04	Speed-loop integral time 2	0.000–10.000s	0.200s
P03.05	High-point frequency for switching	P03.02–P00.03 (Max. output frequency)	10.00Hz
P03.06	Speed-loop output filter	0–8 (0–2^8/10ms)	0
P03.07	Electromotive slip compensation coefficient of vector control	50%–200%	100%
P03.08	Braking slip compensation coefficient of vector control	50%–200%	100%
P03.09	Current-loop proportional coefficient P	0–65535	1000
P03.10	Current-loop integral coefficient I	0–65535	1000
P03.11	Torque setting method	0: Keypad (P03.12) 1: Keypad (P03.12) 2: AI1 3: AI2 4: AI3 5: Pulse frequency HDIA 6: Multi-step torque 7: Modbus/Modbus TCP communication 8: PROFIBUS/CANopen/DeviceNet communication 9: Ethernet communication 10: Pulse frequency HDIB	0

Function code	Name	Description	Default
		11: EtherCAT/PROFINET/EtherNet IP communication 12: Programmable card **Note:** For these settings, 100% corresponds to the motor rated current.	
P03.12	Torque set through keypad	-300.0%–300.0% (of the motor rated current)	50.0%
P03.13	Torque reference filter time	0.000–10.000s	0.010s
P03.14	Setting source of forward rotation upper-limit frequency in torque control	0: Keypad (P03.16) 1: AI1 2: AI2 3: AI3 4: Pulse frequency HDIA 5: Multi-step setting 6: Modbus/Modbus TCP communication 7: PROFIBUS/CANopen/DeviceNet communication 8: Ethernet communication 9: Pulse frequency HDIB 10: EtherCAT/PROFINET/EtherNet IP communication 11: Programmable card 12: Reserved **Note:** For these settings, 100% corresponds to the max. frequency.	0
P03.15	Setting source of reverse rotation upper-limit frequency in torque control	0: Keypad (set by P03.17) 1–11: Same as those of P03.14	0
P03.16	Forward rotation upper-limit frequency set through keypad in torque control	Setting range: 0.00 Hz–P00.03 (Max. output frequency)	50.00Hz

Function code	Name	Description	Default
P03.17	Reverse rotation upper-limit frequency set through keypad in torque control		50.00Hz
P03.18	Setting source of electromotive torque upper limit	0: Keypad (P03.20) 1: AI1 2: AI2 3: AI3 4: Pulse frequency HDIA 5: Modbus/Modbus TCP communication 6: PROFIBUS/CANopen/DeviceNet communication 7: Ethernet communication 8: Pulse frequency HDIB 9: EtherCAT/PROFINET/EtherNet IP communication 10: Programmable card 11: Reserved **Note:** For these settings, 100% corresponds to the motor rated current.	0
P03.19	Setting source of braking torque upper limit	0: Keypad (set by P03.21) 1–10: Same as those for P03.18	0
P03.20	Electromotive torque upper limit set through keypad	0.0–300.0% (of the motor rated current)	180.0%
P03.21	Braking torque upper limit set through keypad		180.0%
P03.22	Weakening coefficient in constant	0.1–2.0	0.3

Function code	Name	Description	Default
	power zone		
P03.23	Lowest weakening point in constant power zone	10%–100%	20%
P03.24	Max. voltage limit	0.0–120.0%	100.0%
P03.25	Pre-exciting time	0.000–10.000s	0.300s
P03.32	Enabling torque control	0: Disable 1: Enable	0
P03.33	Flux weakening integral gain	0–8000	1200
P03.35	Control optimization setting	0x0000–0x1111 Ones place: Torque command selection 0: Torque reference 1: Torque current reference Tens place: Reserved 0: Reserved 1: Reserved Hundreds place: indicates whether to enable speed-loop integral separation 0: Disable 1: Enable Thousands place: Reserved 0: Reserved 1: Reserved Range: 0x0000–0x1111	0x0000
P03.36	Speed-loop differential gain	0.00–10.00s	0.00s
P03.37	High-frequency current-loop proportional coefficient	In the closed-loop vector control mode (P00.00=3), when the frequency is lower than the current-loop high-frequency switching threshold (P03.39), the current-loop PI parameters are P03.09 and P03.10;	1000

Function code	Name	Description	Default
P03.38	High-frequency current-loop integral coefficient	and when the frequency is higher than the current-loop high-frequency switching threshold (P03.39), the current-loop PI parameters are P03.37 and P03.38. Setting range of P03.37: 0–65535 Setting range of P03.38: 0–65535 Setting range of P03.39: 0.0–100.0% (of the maximum frequency)	1000
P03.39	Current-loop high-frequency switching threshold		100.0%
P17.32	Flux linkage	0.0–200.0%	0.0%

5.5.4 Space voltage vector control mode

The VFD also provides the space voltage control function. The space voltage control mode can be used in cases where mediocre control precision is enough and in cases where the VFD needs to drive multiple motors.

The VFD provides multiple V/F curve modes to meet different requirements. You can select V/F curves or set V/F curves as required.

Suggestions:

- For the load featuring constant moment, such as conveyor belt which runs in straight line, as the whole running process requires constant moment, it is recommended to adopt the straight line V/F curve.
- For the load featuring decreasing moment, such as fan and water pumps, as there is a power (square or cube) relation between its actual torque and speed, it is recommended to adopt the V/F curve corresponding to the power of 1.3, 1.7 or 2.0.

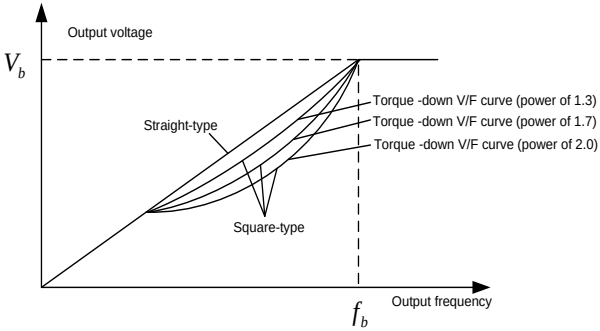

The VFD also provides multi-point V/F curves. You can change the V/F curves output by the VFD by setting the voltage and frequency of the three points in the middle. A whole curve consists of five points starting from (0Hz, 0V) and ending at (motor fundamental frequency, motor rated voltage).

During setting, follow the rule: 0 ≤ f1 ≤ f2 ≤ f3 ≤ Motor fundamental frequency, and, 0 ≤ V1 ≤ V2 ≤ V3 ≤ Motor rated voltage

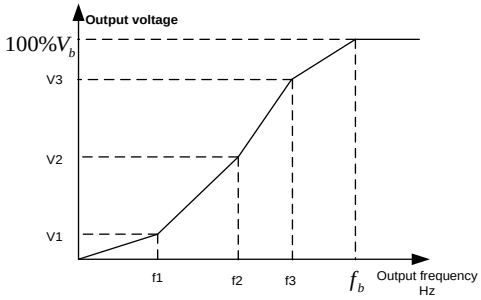

The VFD provides dedicated function codes for the space voltage control mode. You can improve the space voltage control performance by means of setting.

The VFD provides dedicated function codes for the space voltage control mode. You can improve the space voltage control performance by means of setting.

(1) Torque boost

The torque boost function can effectively compensate for the low-speed torque performance in space voltage control. Automatic torque boost has been set by default, which enables the VFD to adjust the torque boost value based on actual load conditions.

Note:

- Torque boost takes effect only at the torque boost cut-off frequency.
- If torque boost is too large, the motor may encounter low-frequency vibration or overcurrent. If such a situation occurs, reduce the torque boost value.

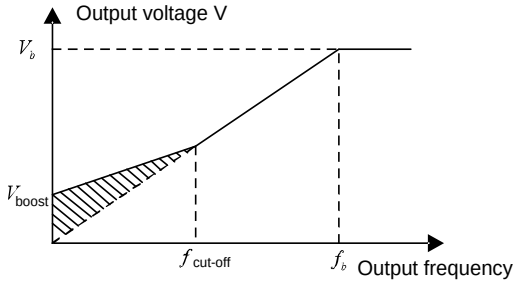

(2) Energy-saving run

During actual running, the VFD can search for the max. efficiency point to keep running in the most efficient state to save energy.

Note:

- This function is generally used in light load or no-load cases.
- This function is no applicable to the cases where sudden load changes often occur.

(3) V/F slip compensation gain

Space voltage vector control belongs to an open-loop mode. Sudden motor load changes cause motor speed fluctuation. In cases where strict speed requirements must be met, you can set the slip compensation gain to compensate for the speed change caused by load fluctuation through VFD internal output adjustment.

The setting range of slip compensation gain is 0–200%, in which 100% corresponds to the rated slip frequency.

Note: Rated slip frequency = (Rated synchronous rotation speed of motor – Rated rotation speed of motor) x (Number of motor pole pairs)/60

(4) Oscillation control

Motor oscillation often occurs in space voltage vector control in large-power driving applications. To solve this problem, the VFD provides two oscillation factor function codes. You can set the function codes based on the oscillation occurrence frequency.

Note: A greater value indicates better control effect. However, if the value is too large, the VFD output current may be too large.

(5) AM IF control

Generally, the IF control mode is valid for AMs. It can be used for SMs only when the frequency is extremely low. Therefore, the IF control mode described in this manual is only involved with AMs. IF control is implemented by performing closed-loop control on the total output current of the VFD. The output voltage adapts to the current reference, and open-loop control is separately performed over the frequency of the voltage and current.

Customized V/F curve (V/F separation) function:

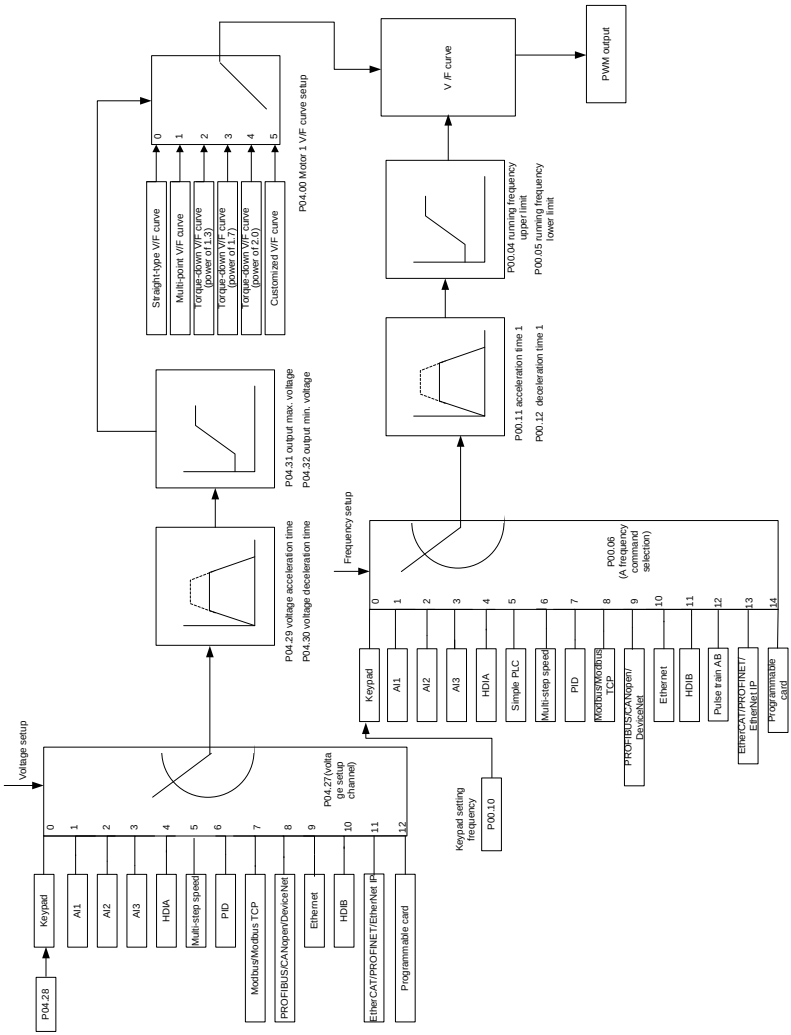

When selecting the customized V/F curve function, you can specify the setting channels and acceleration/deceleration time of voltage and frequency respectively, which form a real-time V/F curve in combination manner.

Note: This type of V/F curve separation can be applied in various variable-frequency power sources. However, exercise caution when setting parameters as improper settings may cause equipment damage.

Function code	Name	Description	Default
P00.00	Speed control mode	0: Sensorless vector control (SVC) mode 0 1: Sensorless vector control (SVC) mode 1 2: Space voltage vector control mode 3: FVC Note: To select 0, 1, or 3 as the control mode, enable the VFD to perform motor parameter autotuning first.	2
P00.03	Max. output frequency	Max (P00.04, 10.00)–590.00Hz	50.00Hz
P00.04	Upper limit of running frequency	P00.05–P00.03	50.00Hz
P00.05	Lower limit of running frequency	0.00Hz–P00.04	0.00Hz
P00.11	ACC time 1	0.0–3600.0s	Model depended
P00.12	DEC time 1	0.0–3600.0s	Model depended
P02.00	Type of motor 1	0: Asynchronous motor (AM) 1: Synchronous motor (SM)	0
P02.02	Rated frequency of AM 1	0.01Hz–P00.03 (Max. output frequency)	50.00Hz
P02.04	Rated voltage of AM 1	0–1200V	Model depended
P04.00	V/F curve setting of motor 1	0: Straight-line V/F curve 1: Multi-point V/F curve 2: Torque-down V/F curve (power of 1.3) 3: Torque-down V/F curve (power of 1.7) 4: Torque-down V/F curve (power of 2.0) 5: Customized V/F curve (V/F separation)	0
P04.01	Torque boost of motor 1	0.0%: (automatic); 0.1%–10.0%	0.0%
P04.02	Torque boost cut-off of motor 1	0.0%–50.0% (of the rated frequency of motor 1)	20.0%
P04.03	V/F frequency point 1 of motor 1	0.00Hz–P04.05	0.00Hz
P04.04	V/F voltage point 1 of motor 1	0.0%–110.0%	0.0%

Function code	Name	Description	Default
P04.05	V/F frequency point 2 of motor 1	P04.03– P04.07	0.00Hz
P04.06	V/F voltage point 2 of motor 1	0.0%–110.0%	0.0%
P04.07	V/F frequency point 3 of motor 1	P04.05– P02.02 or P04.05– P02.16	0.00Hz
P04.08	V/F voltage point 3 of motor 1	0.0%–110.0%	0.0%
P04.09	V/F slip compensation gain of motor 1	0.0–200.0%	100.0%
P04.10	Low-frequency oscillation control factor of motor 1	0–100	10
P04.11	High-frequency oscillation control factor of motor 1	0–100	10
P04.12	Oscillation control threshold of motor 1	0.00Hz–P00.03 (Max. output frequency)	30.00Hz
P04.13	V/F curve setting of motor 2	0: Straight-line V/F curve 1: Multi-point V/F curve 2: Torque-down V/F curve (power of 1.3) 3: Torque-down V/F curve (power of 1.7) 4: Torque-down V/F curve (power of 2.0) 5: Customized V/F curve (V/F separation)	0
P04.14	Torque boost of motor 2	0.0%: (automatic); 0.1%–10.0%	0.0%
P04.15	Torque boost cut-off of motor 2	0.0%–50.0%(of the rated frequency of motor 1)	20.0%
P04.16	V/F frequency point 1 of motor 2	0.00Hz–P04.18	0.00Hz
P04.17	V/F voltage point 1 of motor 2	0.0%–110.0%	0.0%
P04.18	V/F frequency point 2 of motor 2	P04.16– P04.20	0.00Hz

Function code	Name	Description	Default
P04.19	V/F voltage point 2 of motor 2	0.0%–110.0%	0.0%
P04.20	V/F frequency point 3 of motor 2	P04.18– P02.02 or P04.18– P02.16	0.00Hz
P04.21	V/F voltage point 3 of motor 2	0.0%–110.0%	0.0%
P04.22	V/F slip compensation gain of motor 2	0.0–200.0%	100.0%
P04.23	Low-frequency oscillation control factor of motor 2	0–100	10
P04.24	High-frequency oscillation control factor of motor 2	0–100	10
P04.25	Oscillation control threshold of motor 2	0.00Hz–P00.03 (Max. output frequency)	30.00Hz
P04.26	Energy-saving run	0: Disable 1: Automatic energy-saving run	0
P04.27	Voltage setting channel	0: Keypad; output voltage is determined by P04.28 1: AI1 2: AI2 3: AI3 4: HDIA 5: Multi-step 6: PID 7: Modbus/Modbus TCP communication 8: PROFIBUS/CANopen/DeviceNet communication 9: Ethernet communication 10: HDIB 11: EtherCAT/PROFINET/EtherNet IP communication 12: Programmable card 13: Reserved	0

Function code	Name	Description	Default
P04.28	Voltage set through keypad	0.0%–100.0%(of the motor rated voltage)	100.0%
P04.29	Voltage increase time	0.0–3600.0s	5.0s
P04.30	Voltage decrease time	0.0–3600.0s	5.0s
P04.31	Max. output voltage	P04.32–100.0% (of the motor rated voltage)	100.0%
P04.32	Min. output voltage	0.0%–P04.31 (the motor rated voltage)	0.0%
P04.33	Weakening coefficient in constant power zone	1.00–1.30	1.00
P04.34	Pull-in current 1 in SM V/F control	When the SM V/F control mode is enabled, the function code is used to set the reactive current of the motor when the output frequency is lower than the frequency specified by P04.36. Setting range:-100.0%–100.0% (of the motor rated current)	20.0%
P04.35	Pull-in current 2 in SM V/F control	When the SM V/F control mode is enabled, the function code is used to set the reactive current of the motor when the output frequency is higher than the frequency specified by P04.36. Setting range:-100.0%–100.0% (of the motor rated current)	10.0%
P04.36	Frequency threshold for pull-in current switching in SM V/F control	When the SM V/F control mode is enabled, the function code is used to set the frequency threshold for the switching between pull-in current 1 and pull-in current 2. Setting range: 0.00Hz–P00.03 (Max. output frequency)	50.00Hz
P04.37	Reactive current closed-loop proportional coefficient in SM V/F control	When the SM V/F control mode is enabled, the function code is used to set the proportional coefficient of reactive current closed-loop control. Setting range: 0–3000	50

Function code	Name	Description	Default
P04.38	Reactive current closed-loop integral time in SM V/F control	When the SM V/F control mode is enabled, the function code is used to set the integral coefficient of reactive current closed-loop control. Setting range: 0–3000	30
P04.39	Reactive current closed-loop output limit in SM V/F control	When the SM V/F control mode is enabled, the function code is used to set the output limit of the reactive current closed-loop control. A greater value indicates a higher reactive closed-loop compensation voltage and higher output power of the motor. In general, you do not need to modify the function code. Setting range: 0–16000	8000
P04.40	Enabling IF mode for AM 1	0: Disable 1: Enable	0
P04.41	Current setting in IF mode for AM 1	When IF control is adopted for AM 1, the function code is used to set the output current. The value is a percentage in relative to the rated current of the motor. Setting range: 0.0–200.0%	120.0%
P04.42	Proportional coefficient in IF mode for AM 1	When IF control is adopted for AM 1, the function code is used to set the proportional coefficient of the output current closed-loop control. Setting range: 0–5000	350
P04.43	Integral coefficient in IF mode for AM 1	When IF control is adopted for AM 1, the function code is used to set the integral coefficient of the output current closed-loop control. Setting range: 0–5000	150
P04.44	Starting frequency point for switching off IF mode for AM 1	0.00–P04.50	10.00Hz
P04.45	Enabling IF mode for AM 2	0: Disable 1: Enable	0

Function code	Name	Description	Default
P04.46	Current setting in IF mode for AM 2	When IF control is adopted for AM 2, the function code is used to set the output current. The value is a percentage in relative to the rated current of the motor. Setting range: 0.0–200.0%	120.0%
P04.47	Proportional coefficient in IF mode for AM 2 proportional coefficient	When IF control is adopted for AM 2, the function code is used to set the proportional coefficient of output current closed-loop control. Setting range: 0–5000	350
P04.48	Integral coefficient in IF mode for AM 2	When IF control is adopted for AM 2, the function code is used to set the integral coefficient of output current closed-loop control. Setting range: 0–5000	150
P04.49	Starting frequency point for switching off IF mode for AM 2	0.00–P04.51	10.00Hz
P04.50	End frequency point for switching off IF mode for AM 1	P04.44–P00.03	25.00Hz
P04.51	End frequency point for switching off IF mode for AM 2	P04.49 – P00.03	25.00Hz

5.5.5 Torque control

The VFD supports torque control and speed control. Speed control aims to stabilize the speed to keep the set speed consistent with the actual running speed, meanwhile, the max. load-carrying capacity is restricted by the torque limit. Torque control aims to stabilize the torque to keep the set torque consistent with the actual output torque, meanwhile, the output frequency is restricted by the upper and lower limits.

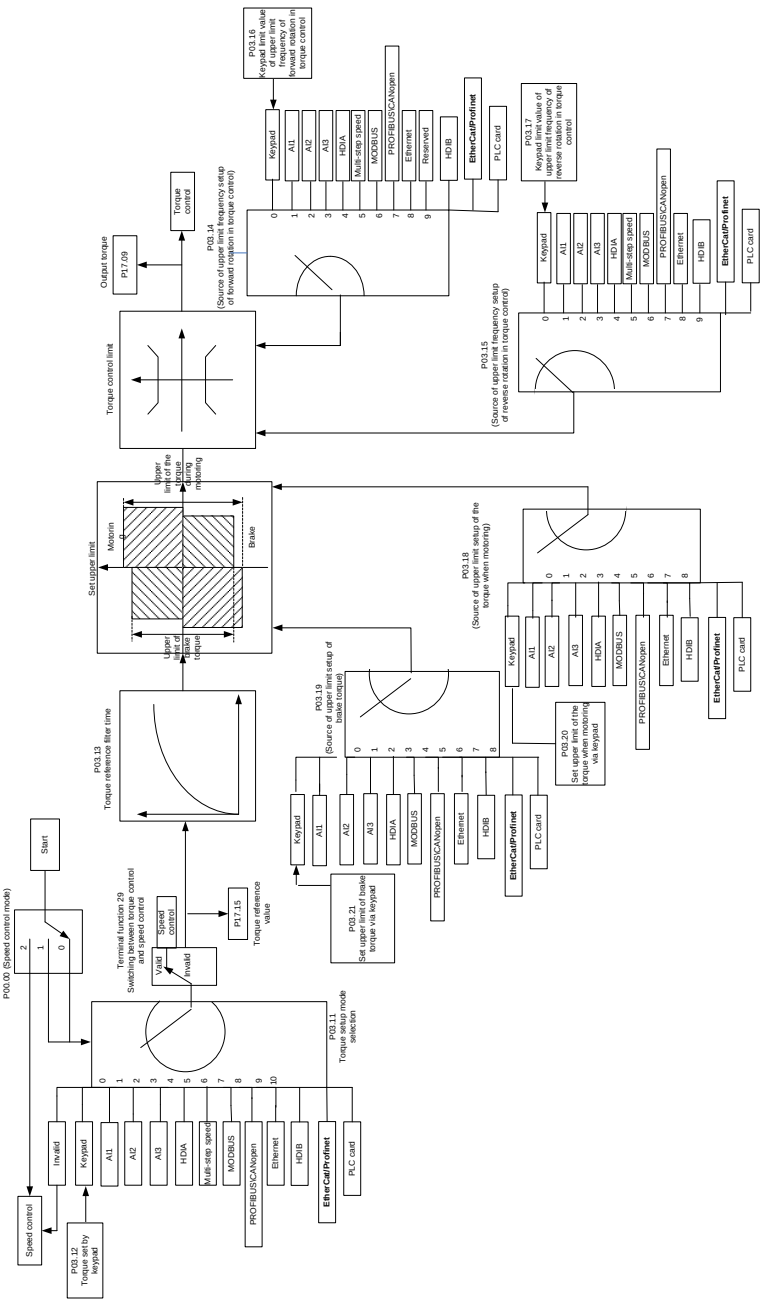
P00.00 (Speed control mode)
Start
Terminal function 29
Switching between torque control and speed control
Valid
Invalid
Speed control
P17.15
Torque reference value
P03.13
Torque reference filter time
P03.11
Torque setup mode selection
P03.12
Torque setup mode by keypad
Speed control
Invalid
Keypad
AI1
AI2
AI3
HDIA
Multi-step speed
MODBUS
PROFIBUS/CANopen
Ethernet
HDIB
EtherCat/Profinet
PLC card
Set upper limit
Motorin
Brake
Upper limit of brake torque
Upper limit of the torque during motoring
P03.21
Set upper limit of brake torque via keypad
P03.19
(Source of upper limit setup of brake torque)
P03.18
(Source of upper limit setup of the torque when motoring)
P03.20
Set upper limit of the torque when motoring via keypad
Torque control limit
Output torque
P17.09
Torque control
P03.14
(Source of upper limit frequency setup of forward rotation in torque control)
P03.15
(Source of upper limit frequency setup of reverse rotation in torque control)
P03.16
Keypad limit value of upper limit frequency of forward rotation in torque control
P03.17
Keypad limit value of upper limit frequency of reverse rotation in torque control
Reserved

Function code	Name	Description	Default
P00.00	Speed control mode	0: Sensorless vector control (SVC) mode 0 1: Sensorless vector control (SVC) mode 1 2: Space voltage vector control mode 3: FVC **Note:** To select 0, 1, or 3 as the control mode, enable the VFD to perform motor parameter autotuning first.	2
P03.32	Enabling torque control	0: Disable 1: Enable	0
P03.11	Torque setting method	0: Keypad (P03.12) 1: Keypad (P03.12) 2: AI1 3: AI2 4: AI3 5: Pulse frequency HDIA 6: Multi-step torque 7: Modbus/Modbus TCP communication 8: PROFIBUS/CANopen/DeviceNet communication 9: Ethernet communication 10: Pulse frequency HDIB 11: EtherCAT/PROFINET/EtherNet IP communication 12: Programmable card **Note:** For these settings, 100% corresponds to the motor rated current.	0
P03.12	Torque set through keypad	-300.0%–300.0% (of the motor rated current)	50.0%
P03.13	Torque reference filter time	0.000–10.000s	0.010s
P03.14	Setting source of forward rotation upper-limit frequency in torque control	0: Keypad (P03.16) 1: AI1 2: AI2 3: AI3 4: Pulse frequency HDIA 5: Multi-step setting 6: Modbus/Modbus TCP communication 7: PROFIBUS/CANopen/DeviceNet communication 8: Ethernet communication	0

Function code	Name	Description	Default
		9: Pulse frequency HDIB 10: EtherCAT/PROFINET/EtherNet IP communication 11: Programmable card 12: Reserved **Note:** For these settings, 100% corresponds to the max. frequency.	
P03.15	Setting source of reverse rotation upper-limit frequency in torque control	0: Keypad (P03.17) 1: AI1 2: AI2 3: AI3 4: Pulse frequency HDIA 5: Multi-step setting 6: Modbus/Modbus TCP communication 7: PROFIBUS/CANopen/DeviceNet communication 8: Ethernet communication 9: Pulse frequency HDIB 10: EtherCAT/PROFINET/EtherNet IP communication 11: Programmable card 12: Reserved **Note:** For these settings, 100% corresponds to the max. frequency.	0
P03.16	Forward rotation upper-limit frequency set through keypad in torque control	0.00Hz–P00.03 (Max. output frequency)	50.00 Hz
P03.17	Reverse rotation upper-limit frequency set through keypad in torque control	0.00Hz–P00.03 (Max. output frequency)	50.00 Hz
P03.18	Setting source of electromotive torque upper limit	0: Keypad (P03.20) 1: AI1 2: AI2 3: AI3 4: Pulse frequency HDIA	0

Function code	Name	Description	Default
		5: Modbus/Modbus TCP communication 6: PROFIBUS/CANopen/DeviceNet communication 7: Ethernet communication 8: Pulse frequency HDIB 9: EtherCAT/PROFINET/EtherNet IP communication 10: Programmable card 11: Reserved **Note:** For these settings, 100% corresponds to the motor rated current.	
P03.19	Setting source of braking torque upper limit	0: Keypad (P03.21) 1: AI1 2: AI2 3: AI3 4: Pulse frequency HDIA 5: Modbus/Modbus TCP communication 6: PROFIBUS/CANopen/DeviceNet communication 7: Ethernet communication 8: Pulse frequency HDIB 9: EtherCAT/PROFINET/EtherNet IP communication 10: Programmable card 11: Reserved **Note:** For these settings, 100% corresponds to the motor rated current.	0
P03.20	Electromotive torque upper limit set through keypad	0.0–300.0% (of the motor rated current)	180.0%
P03.21	Braking torque upper limit set through keypad	0.0–300.0% (of the motor rated current)	180.0%
P17.09	Output torque	-250.0–250.0%	0.0%
P17.15	Torque reference value	-300.0–300.0% (of the motor rated current)	0.0%

5.5.6 Motor parameters

⚡	✧ Check the safety conditions surrounding the motor and load machineries before autotuning as physical injury may occur due to sudden start of motor during autotuning. ✧ Although the motor does not run during static autotuning, the motor is still supplied with power. Do not touch the motor during autotuning; otherwise, electric shock may occur. Do not touch the motor before autotuning is completed.
⚠	✧ If the motor has been connected to a load, do not carry out rotary autotuning. Otherwise, the VFD may malfunction or may be damaged. If rotary autotuning is carried out on a motor which has been connected to a load, incorrect motor parameter settings and motor action exceptions may occur. Disconnect from the load to carry out autotuning if necessary.

The VFD can drive both asynchronous motors and synchronous motors, and it supports two sets of motor parameters, which can be switched over by multifunction digital input terminals or communication modes.

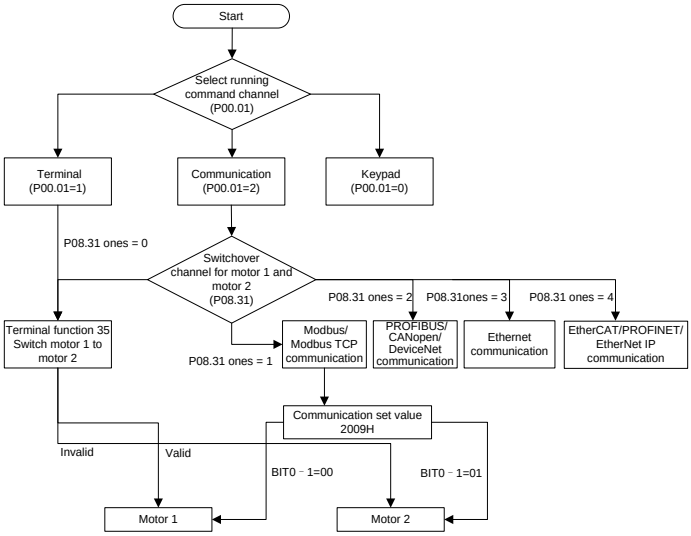

The control performance of the VFD is based on accurate motor models. Therefore, you need to carry out motor parameter autotuning before running a motor for the first time (taking motor 1 as an example).

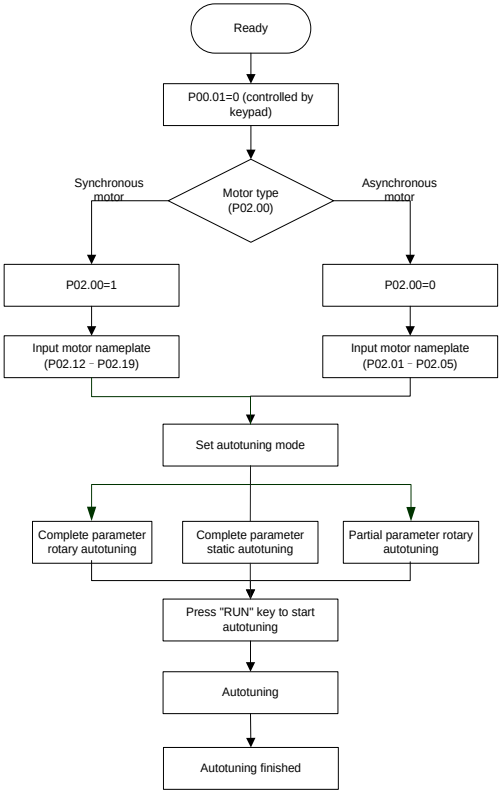

Note:

- Motor parameters must be set correctly according to the motor nameplate.
- If rotary autotuning is selected during motor autotuning, disconnect the motor from the load to put the motor in static and no-load state. Otherwise, the motor parameter autotuning results may be incorrect. In addition, autotune P02.06–P02.10 for AMs and autotune P02.20–P02.23 for SMs.
- If static autotuning is selected for motor autotuning, there is no need to disconnect the motor from the load, but the control performance may be impacted as only a part of the motor parameters have been autotuned. In addition, autotune P02.06–P02.10 for AMs and autotune P02.20–P02.22 for SMs. P02.23 can be obtained through calculation.
- Motor autotuning can be carried out on the present motor only. If you need to perform autotuning on the other motor, switch the motor through selecting the switchover channel of motor 1 and motor 2 by setting the ones place of P08.31.

Related parameter list:

Function code	Name	Description	Default
P00.01	Channel of running commands	0: Keypad 1: Terminal 2: Communication	0
P00.15	Motor parameter autotuning	0: No operation 1: Complete parameter rotary autotuning 2: Complete parameter static autotuning 3: Partial parameter static autotuning 4: Complete parameter rotary autotuning 2 (AM) 5: Partial parameter static autotuning 2 (AM)	0
P02.00	Type of motor 1	0: Asynchronous motor (AM) 1: Synchronous motor (SM)	0
P02.01	Rated power of AM 1	0.1–3000.0kW	Model depended
P02.02	Rated frequency of AM 1	0.01Hz–P00.03 (Max. output frequency)	50.00Hz
P02.03	Rated speed of AM 1	1–60000rpm	Model depended
P02.04	Rated voltage of AM 1	0–1200V	Model depended
P02.05	Rated current of AM 1	0.8–6000.0A	Model depended
P02.06	Stator resistance of AM 1	0.001–65.535Ω	Model depended
P02.07	Rotor resistance of AM 1	0.001–65.535Ω	Model depended
P02.08	Leakage inductance of AM 1	0.1–6553.5mH	Model depended
P02.09	Mutual inductance of AM 1	0.1–6553.5mH	Model depended
P02.10	No-load current of AM 1	0.1–6553.5A	Model depended
P02.15	Rated power of SM 1	0.1–3000.0kW	Model depended
P02.16	Rated frequency of SM 1	0.01Hz–P00.03 (Max. output frequency)	50.00Hz
P02.17	Number of pole pairs of SM 1	1–50	2
P02.18	Rated voltage of SM 1	0–1200V	Model

Function code	Name	Description	Default
			depended
P02.19	Rated current of SM 1	0.8–6000.0A	Model depended
P02.20	Stator resistance of SM 1	0.001–65.535Ω	Model depended
P02.21	Direct-axis inductance of SM 1	0.01–655.35mH	Model depended
P02.22	Quadrature-axis inductance of SM 1	0.01–655.35mH	Model depended
P02.23	Counter-emf constant of SM 1	0–10000	300
P05.01–P05.06	Function selection of multifunction digital input terminals (S1–S4, HDIA, HDIB)	35: Switch from motor 1 to motor 2	
P08.31	Switching between motor 1 and motor 2	0x00–0x14 Ones: Switchover channel 0: Switch over by terminal 1: Switch over by Modbus/Modbus TCP communication 2: Switch over by PROFIBUS/CANopen/DeviceNet 3: Switch over by Ethernet communication 4: Switch over by EtherCAT/PROFINET/EtherNet IP communication Tens: Motor switchover during running 0: Disable switchover during running 1: Enable switchover during running	0x00
P12.00	Type of motor 2	0: Asynchronous motor (AM) 1: Synchronous motor (SM)	0
P12.01	Rated power of AM 2	0.1–3000.0kW	Model depended
P12.02	Rated frequency of AM 2	0.01Hz–P00.03 (Max. output frequency)	50.00Hz
P12.03	Rated speed of AM 2	1–60000rpm	Model depended
P12.04	Rated voltage of AM 2	0–1200V	Model depended

Function code	Name	Description	Default
P12.05	Rated current of AM 2	0.8–6000.0A	Model depended
P12.06	Stator resistance of AM 2	0.001–65.535Ω	Model depended
P12.07	Rotor resistance of AM 2	0.001–65.535Ω	Model depended
P12.08	Leakage inductance of AM 2	0.1–6553.5mH	Model depended
P12.09	Mutual inductance of AM 2	0.1–6553.5mH	Model depended
P12.10	No-load current of AM 2	0.1–6553.5A	Model depended
P12.15	Rated power of SM 2	0.1–3000.0kW	Model depended
P12.16	Rated frequency of SM 2	0.01Hz–P00.03 (Max. output frequency)	50.00Hz
P12.17	Number of pole pairs of SM 2	1–50	2
P12.18	Rated voltage of SM 2	0–1200V	Model depended
P12.19	Rated current of SM 2	0.8–6000.0A	Model depended
P12.20	Stator resistance of SM 2	0.001–65.535Ω	Model depended
P12.21	Direct-axis inductance of SM 2	0.01–655.35mH	Model depended
P12.22	Quadrature-axis inductance of SM 2	0.01–655.35mH	Model depended
P12.23	Counter-emf constant of SM 2	0–10000V	300V

5.5.7 Start/stop control

The start/stop control of the VFD involves three states: start after a running command is given at power-on; start after power-off restart is effective; start after automatic fault reset. The three start/stop control states are described in the following.

There are three start modes for the VFD, which are start at starting frequency, start after DC braking, and start after speed tracking. You can select the proper start mode based on actual conditions.

For large-inertia load, especially in cases where reversal may occur, you can choose to start after DC braking or start after speed tracking.

Note: It is recommended to drive SMs in direct start mode.

(1) Logic diagram for start after a running command is given at power-on

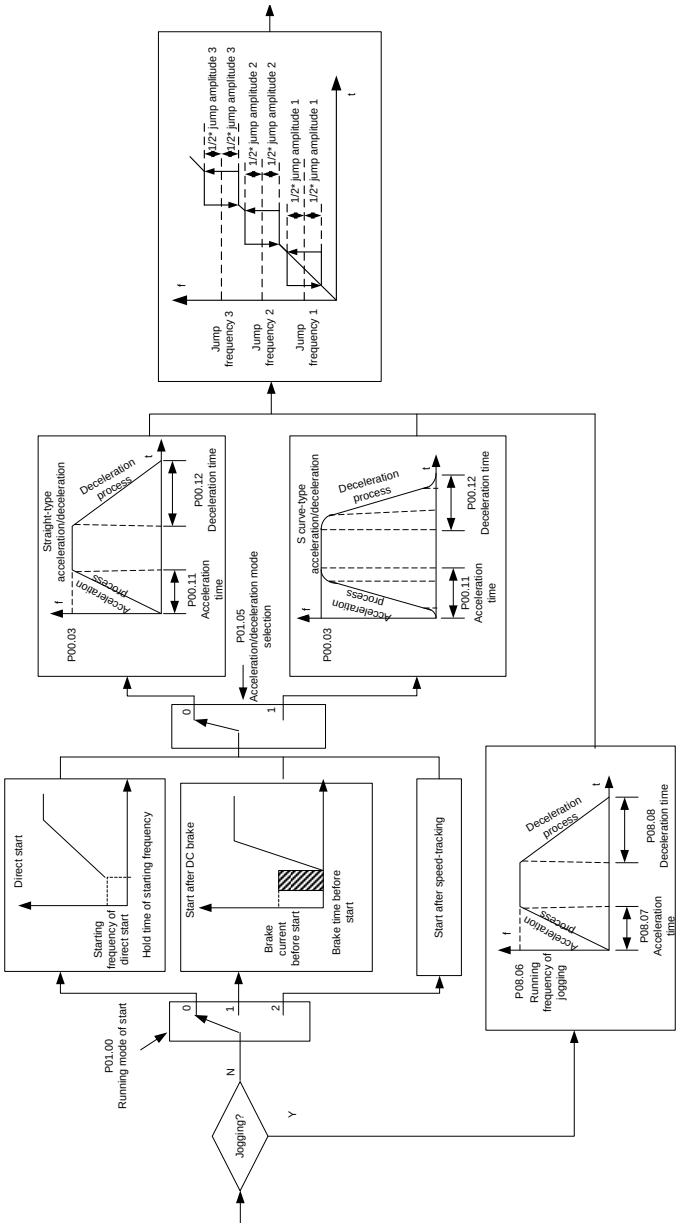

(2) Logic diagram for start after power-off restart is effective

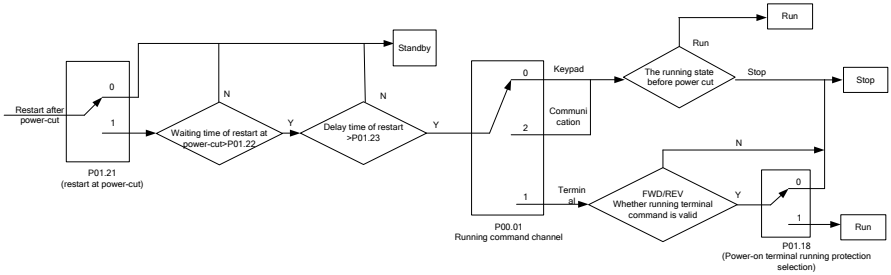

(3) Logic diagram for start after automatic fault reset

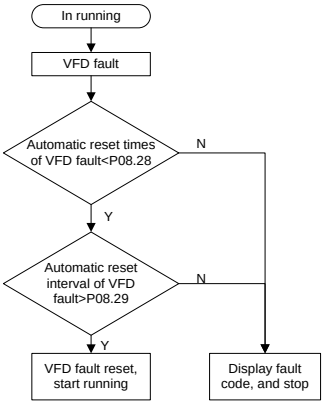

Related parameter list:

Function code	Name	Description	Default
P00.01	Channel of running commands	0: Keypad 1: Terminal 2: Communication	0
P00.11	ACC time 1	0.0–3600.0s	Model depended
P00.12	DEC time 1	0.0–3600.0s	Model depended
P01.00	Start mode	0: Direct start 1: Start after DC braking 2: Start after speedtracking	0
P01.01	Starting frequency of direct start	0.00–50.00Hz	0.50Hz

Function code	Name	Description	Default
P01.02	Starting frequency hold time	0.0–50.0s	0.0s
P01.03	Braking current before start	0.0–100.0%	0.0%
P01.04	DC braking time before start	0.00–50.00s	0.00s
P01.05	ACC and DEC mode	0: Linear 1: S curve **Note:** If mode 1 is selected, set P01.06, P01.07, P01.27, and P01.28 accordingly.	0
P01.08	Stop mode	0: Decelerate to stop 1: Coast to stop	0
P01.09	Starting frequency of DC braking for stop	0.00Hz–P00.03 (Max. output frequency)	0.00Hz
P01.10	Wait time before DC braking for stop	0.00–50.00s	0.00s
P01.11	DC braking current for stop	0.0–100.0%	0.0%
P01.12	DC braking time for stop	0.00–50.00s	0.00s
P01.13	FWD/REV running deadzone time	0.0–3600.0s	0.0s
P01.14	FWD/REV running switching mode	0: Switch at zero frequency 1: Switch at the starting frequency 2: Switch after the speed reaches the stop speed with a delay	1
P01.15	Stop speed	0.00–100.00Hz	0.50 Hz
P01.16	Stop speed detection mode	0: Detect by the set speed (unique in V/F control mode) 1: Detect by the feedback speed	1
P01.18	Terminal-based running command protection at power-on	0: The terminal running command is invalid at power-on 1: The terminal running command is valid at power-on	0
P01.19	Action selected when running frequency less than frequency lower limit (valid when frequency	Setting range: 0x00–0x12 Ones place: Action selection 0: Run at the frequency lower limit 1: Stop	0x00

Function code	Name	Description	Default
	lower limit greater than 0)	2: Sleep Tens place: Stop mode 0: Coast to stop 1: Decelerate to stop	
P01.20	Wake-up-from-sleep delay	0.0–3600.0s (valid when ones place of P01.19=2)	0.0s
P01.21	Restart after power failure	0: Disable 1: Enable	0
P01.22	Wait time for power-on restart	0.0–3600.0s (valid when P01.21=1)	1.0s
P01.23	Start delay	0.0–60.0s	0.0s
P01.24	Stop speed delay	0.0–100.0s	0.0s
P01.25	Open-loop 0Hz output selection	0: Output without voltage 1: Output with voltage 2: Output with the DC braking current for stop	0
P01.26	DEC time for emergency stop	0.0–60.0s	2.0s
P01.27	Time of starting segment of DEC S curve	0.0–50.0s	0.1s
P01.28	Time of ending segment of DEC S curve	0.0–50.0s	0.1s
P01.29	Short-circuit braking current	0.0–150.0% (of the VFD rated current)	0.0%
P01.30	Hold time of short-circuit braking for start	0.00–50.00s	0.00s
P01.31	Hold time of short-circuit braking for stop	0.00–50.00s	0.00s
P01.32	Pre-exciting time of jog	0–10.000s	0.300s
P01.33	Starting frequency of braking for jogging to stop	0–P00.03	0.00Hz
P01.34	Delay to enter sleep	0.0–3600.0s	0.0s
P05.01–P05.06	Digital input function selection	1: Run forward 2: Run reversely 4: Jog forward 5: Jog reversely 6: Coast to stop	

Function code	Name	Description	Default
		7: Reset faults 8: Pause running 21: ACC/DEC time selection 1 22: ACC/DEC time selection 2 30: Disable ACC/DEC	
P08.00	ACC time 2	0.0–3600.0s	Model depended
P08.01	DEC time 2	0.0–3600.0s	Model depended
P08.02	ACC time 3	0.0–3600.0s	Model depended
P08.03	DEC time 3	0.0–3600.0s	Model depended
P08.04	ACC time 4	0.0–3600.0s	Model depended
P08.05	DEC time 4	0.0–3600.0s	Model depended
P08.06	Running frequency of jog	0.00Hz–P00.03 (Max. output frequency)	5.00Hz
P08.07	ACC time for jog	0.0–3600.0s	Model depended
P08.08	DEC time for jog	0.0–3600.0s	Model depended
P08.19	Switching frequency of ACC/DEC time	0.00–P00.03(Max. output frequency) 0.00Hz: No switchover If the running frequency is greater than P08.19, switch to ACC/DEC time 2.	0
P08.21	Reference frequency of ACC/DEC time	0: Max. output frequency 1: Set frequency 2: 100Hz **Note:** Valid only for straight-line ACC/DEC	0
P08.28	Auto fault reset count	0–10	0
P08.29	Auto fault reset interval	0.1–3600.0s	1.0s

5.5.8 Frequency setting

The VFD supports multiple frequency setting methods, which can be divided into two types: main reference channel and auxiliary reference channel.

There are two main reference channels, namely frequency reference channel A and frequency

reference channel B. These two channels support simple arithmetical operation between each other, and they can be switched dynamically by setting multi-function terminals.

There is one input mode for auxiliary reference channel, namely terminal UP/DOWN switch input. By setting function codes, you can enable the corresponding reference mode and the impact made on the VFD frequency reference by this reference mode.

The actual reference of VFD is comprised of the main reference channel and auxiliary reference channel.

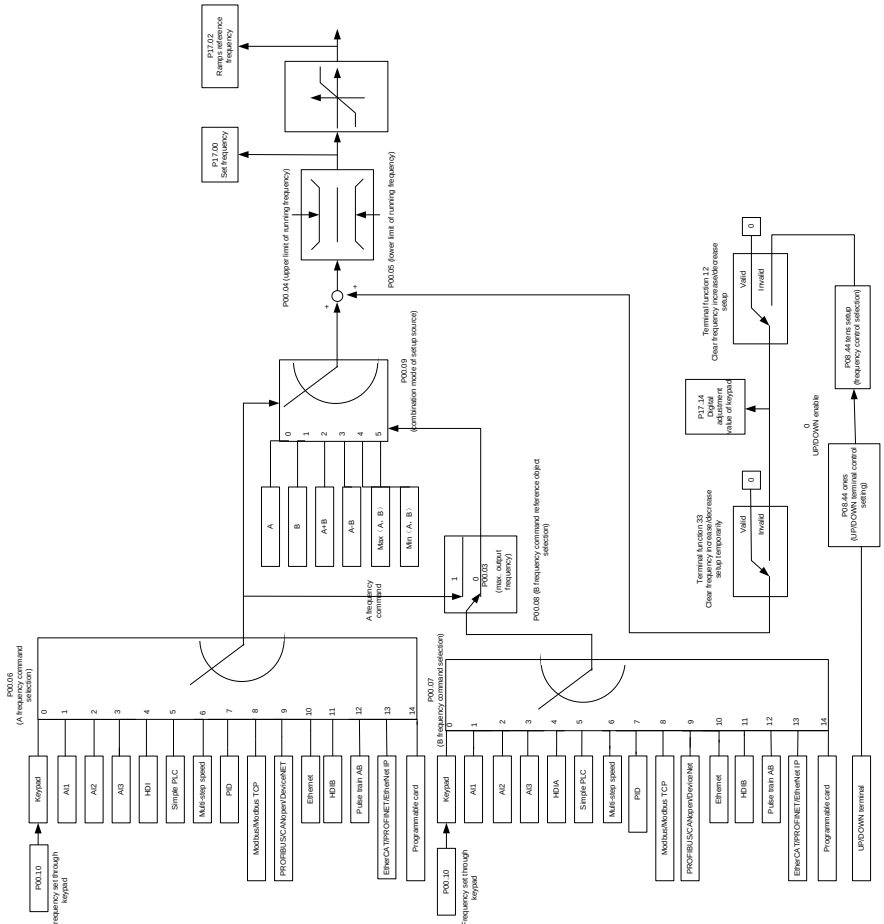

The VFD supports switchover between different reference channels, and the rules for channel switchover are shown in the following.

Present reference channel P00.09	Multifunction terminal function 13 Channel A switched to channel B	Multifunction terminal function 14 Combination setting switched to channel A	Multifunction terminal function 15 Combination setting switched to channel B
A	B	/	/
B	A	/	/
A+B	/	A	B
A-B	/	A	B
Max(A,B)	/	A	B
Min(A,B)	/	A	B

Note: "/" indicates this multifunction terminal is invalid under present reference channel.

When setting the auxiliary frequency inside the VFD via multi-function terminal UP (10) and DOWN (11), you can increase/decrease the frequency quickly by setting P08.45 (UP terminal frequency incremental change rate) and P08.46 (DOWN terminal frequency decrement change rate).

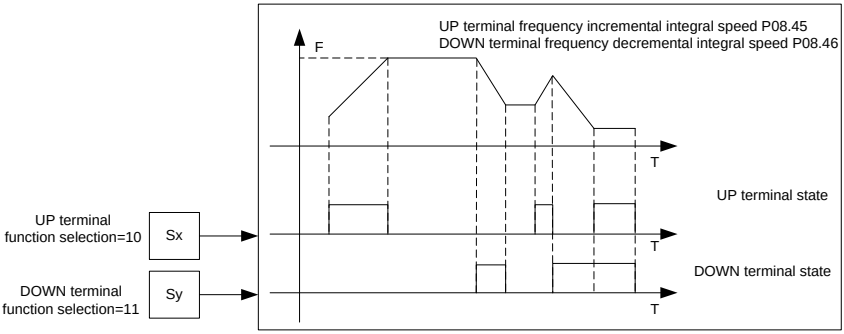

Related parameter list:

Function code	Name	Description	Default
P00.03	Max. output frequency	Max (P00.04, 10.00)–590.00Hz	50.00Hz
P00.04	Upper limit of running frequency	P00.05–P00.03	50.00Hz
P00.05	Lower limit of running frequency	0.00Hz–P00.04	0.00Hz
P00.06	Setting channel of A frequency command	0: Keypad 1: AI1	0

Function code	Name	Description	Default
P00.07	Setting channel of B frequency command	2: AI2 3: AI3 4: High speed pulse HDIA 5: Simple PLC program 6: Multi-step speed running 7: PID control 8: Modbus/Modbus TCP communication 9: PROFIBUS/CANopen/DeviceNet communication 10: Ethernet communication 11: High speed pulse HDIB 12: Pulse train AB 13: EtherCAT/PROFINET/EtherNet IP communication 14: Programmable card 15: Reserved	15
P00.08	Reference object of B frequency command	0: Max. output frequency 1: A frequency command	0
P00.09	Combination mode of setting source	0: A 1: B 2: (A+B) 3: (A-B) 4: Max(A, B) 5: Min. (A, B)	0
P05.01–P05.06	Function selection of multifunction digital input terminals (S1–S4, HDIA, HDIB)	10: Increase frequency setting (UP) 11: Decrease frequency setting (DOWN) 12: Clear the frequency increase/decrease setting 13: Switch between A setting and B setting 14: Switch between combination setting and A setting 15: Switch between combination setting and B setting	
P08.42	Reserved		
P08.43	Reserved		

Function code	Name	Description	Default
P08.44	UP/DOWN terminal control setting	0x000–0x221 Ones place: Frequency setting selection 0: The setting made through UP/DOWN is valid. 1: The setting made through UP/DOWN is invalid. Ones place: Frequency control selection 0: Valid only when P00.06=0 or P00.07=0 1: Valid for all frequency setting methods 2: Invalid for multi-step speed running when multi-step speed running has the priority Hundreds place: Action selection for stop 0: Setting is valid. 1: Valid during running, cleared after stop 2: Valid during running, cleared after a stop command is received	0x000
P08.45	Frequency increment change rate of the UP terminal	0.01–50.00 Hz/s **Note:** The value is also used as the frequency increment or decrement that is made by pressing the UP/DOWN key on the LCD keypad.	0.50 Hz/s
P08.46	Frequency decrement change rate of the DOWN terminal	0.01–50.00 Hz/s	0.50 Hz/s
P17.00	Set frequency	0.00Hz–P00.03 (Max. output frequency)	0.00Hz
P17.02	Ramp reference frequency	0.00Hz–P00.03 (Max. output frequency)	0.00Hz
P17.14	Digital adjustment value	0.00Hz–P00.03	0.00Hz

5.5.9 Analog input

The VFD provides two analog input terminals, which are AI1 supporting 0–10V/0–20mA, (whether the input is voltage or current can be set by P05.50), and AI2 supporting -10–10V, and two high-speed pulse input terminals. Each input can be filtered separately, and the corresponding reference curve can be set by adjusting the reference corresponds to the max. value and min. value.

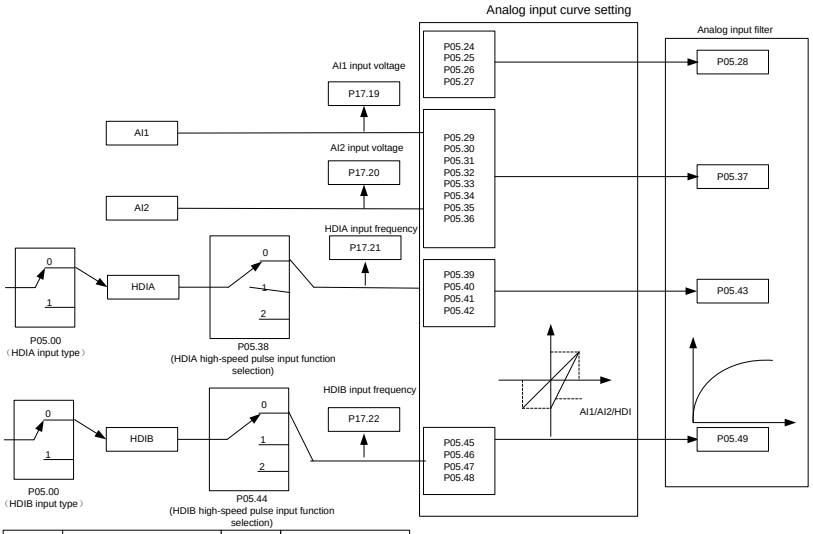

P05.00	Ones: 0: HDIA is high-speed pulse input 1: HDIA is digital input	P05.38	0: Set input via frequency 1: Reserved 2: Input via encoder
P05.00	Tens: 0: HDIB is high-speed pulse input 1: HDIB is digital input	P05.44	0: Set input via frequency 1: Reserved 2: Input via encoder

Related parameter list:

Function code	Name	Description	Default
P05.00	HDI input type	0x00–0x11 Ones place: HDIA input type 0: HDIA is high-speed pulse input 1: HDIA is digital input Tens place: HDIB input type 0: HDIB is high-speed pulse input 1: HDIB is digital input	0x00
P05.24	AI1 lower limit	0.00V–P05.26	0.00V
P05.25	Corresponding setting of AI1 lower limit	-300.0%–300.0%	0.0%
P05.26	AI1 upper limit	P05.24–10.00V	10.00V
P05.27	Corresponding setting of AI1 upper limit	-300.0%–300.0%	100.0%
P05.28	AI1 input filter time	0.000s–10.000s	0.100s
P05.29	AI2 lower limit	-10.00V–P05.31	-10.00V

Function code	Name	Description	Default
P05.30	Corresponding setting of AI2 lower limit	-300.0%–300.0%	-100.0%
P05.31	AI2 middle value 1	P05.29–P05.33	0.00V
P05.32	Corresponding setting of AI2 middle value 1	-300.0%–300.0%	0.0%
P05.33	AI2 middle value 2	P05.31–P05.35	0.00V
P05.34	Corresponding setting of AI2 middle value 2	-300.0%–300.0%	0.0%
P05.35	AI2 upper limit	P05.33–10.00V	10.00V
P05.36	Corresponding setting of AI2 upper limit	-300.0%–300.0%	100.0%
P05.37	AI2 input filter time	0.000s–10.000s	0.100s
P05.38	HDIA high-speed pulse input function selection	0: Input set through frequency 1: Reserved 2: Input set through encoder, used together with HDIB	0
P05.39	HDIA lower limit frequency	0.000 kHz – P05.41	0.000kHz
P05.40	Corresponding setting of HDIA lower limit frequency	-300.0%–300.0%	0.0%
P05.41	HDIA upper limit frequency	P05.39 –50.000kHz	50.000kHz
P05.42	Corresponding setting of HDIA upper limit frequency	-300.0%–300.0%	100.0%
P05.43	HDIA frequency input filter time	0.000s–10.000s	0.030s
P05.44	HDIB high-speed pulse input function selection	0: Input set through frequency 1: Reserved 2: Input set through encoder, used together with HDIA	0
P05.45	HDIB lower limit frequency	0.000 kHz – P05.47	0.000kHz
P05.46	Corresponding setting of HDIB lower limit frequency	-300.0%–300.0%	0.0%
P05.47	HDIB upper limit frequency	P05.45 –50.000kHz	50.000kHz
P05.48	Corresponding setting of HDIB upper limit frequency	-300.0%–300.0%	100.0%
P05.49	HDIB frequency input filter time	0.000s–10.000s	0.030s
P05.50	AI1 input signal type	0–1	0

Function code	Name	Description	Default
		0: Voltage 1: Current	

5.5.10 Analog output

The VFD provides one analog output terminal (supporting 0–10V/0–20mA) and one high-speed pulse output terminal. Analog output signals can be filtered separately, and the proportional relation can be adjusted by setting the max. value, min. value, and the percentage of their corresponding output. Analog output signals can output the motor speed, output frequency, output current, motor torque and motor power at a certain proportion.

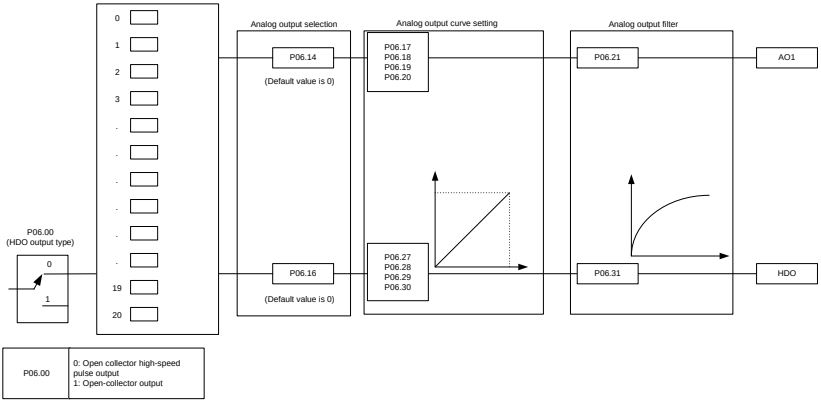

Terminal output is described as follows:

Setting	Function	Description
0	Running frequency	0–Max. output frequency
1	Set frequency	0–Max. output frequency
2	Ramp reference frequency	0–Max. output frequency
3	Running speed	0–Synchronous speed corresponding to max. output frequency
4	Output current (relative to VFD)	0–Twice the VFD rated current
5	Output current (relative to motor)	0–Twice the motor rated current
6	Output voltage	0–1.5 times the VFD rated voltage
7	Output power	0–Twice the rated power
8	Set torque value (bipolar)	0–Twice the VFD rated current. A negative value corresponds to 0.0% by default.
9	Output torque (absolute value)	0 – +/-(Twice the motor rated torque)
10	AI1 input	0–10V/0–20mA
11	AI2 input	0V–10V. A negative value corresponds to

Setting	Function	Description
		0.0% by default.
12	AI3 input	0–10V/0–20mA
13	High-speed pulse HDIA input	0.00–50.00kHz
14	Value 1 set through Modbus/Modbus TCP communication	0–1000
15	Value 2 set through Modbus/Modbus TCP communication	0–1000
16	Value 1 set through PROFIBUS/CANopen/DeviceNet communication	0–1000
17	Value 2 set through PROFIBUS/CANopen/DeviceNet communication	0–1000
18	Value 1 set through Ethernet communication	0–1000
19	Value 2 set through Ethernet communication	0–1000
20	High-speed pulse HDIA input	0.00–50.00kHz
21	Value 1 set through EtherCAT/PROFINET/EtherNet IP communication	0–1000. A negative value corresponds to 0.0% by default.
22	Torque current (bipolar)	0–Three times the motor rated current. A negative value corresponds to 0.0% by default.
23	Exciting current	0–Three times the motor rated current. A negative value corresponds to 0.0% by default.
24	Set frequency (bipolar)	0–Max. output frequency. A negative value corresponds to 0.0% by default.
25	Ramp reference frequency (bipolar)	0–Max. output frequency. A negative value corresponds to 0.0% by default.
26	Rotational speed (bipolar)	0–Synchronous speed corresponding to max. output frequency A negative value corresponds to 0.0% by default.
27	Value 2 set through EtherCAT/PROFINET/EtherNet IP communication	0–1000

Setting	Function	Description
28	AO1 from the programmable card	0–1000
29	AO2 from the programmable card	0–1000
30	Rotational speed	0–Twice the motor rated synchronous speed
31	Output torque (bipolar)	0–Twice motor rated torque. A negative value corresponds to 0.0% by default.
32	AI/AO temperature detection output	AO value of AI/AO temperature detection
33–63	Reserved	

Related parameter list:

Function code	Name	Description	Default
P06.00	HDO output type	0: Open collector high-speed pulse output 1: Open collector output	0
P06.14	AO1 output	0: Running frequency	0
P06.15	Reserved	1: Set frequency	0
P06.16	HDO high-speed pulse output	2: Ramp reference frequency 3: Rotational speed (100% corresponds to the speed corresponding to max. output frequency) 4: Output current (100% corresponds to twice the VFD rated current) 5: Output current (100% corresponds to twice the motor rated current) 6: Output voltage (100% corresponds to 1.5 times the VFD rated voltage) 7: Output power (100% corresponds to twice the motor rated power) 8: Set torque (100% corresponds to twice the motor rated torque) 9: Output torque (Absolute value, 100% corresponds to twice the motor rated torque) 10: AI1 input 11: AI2 input 12: AI3 input	0

Function code	Name	Description	Default
		13: HDIA input 14: Value 1 set through Modbus/Modbus TCP communication 15: Value 2 set through Modbus/Modbus TCP communication 16: Value 1 set through PROFIBUS/CANopen/DeviceNet communication 17: Value 2 set through PROFIBUS/CANopen/DeviceNet communication 18: Value 1 set through Ethernet communication 19: Value 2 set through Ethernet communication 20: HDIB input 21: Value 1 set through EtherCAT/PROFINET/EtherNet IP communication 22: Torque current (bipolar, 0–Triple the motor rated current) 23: Exciting current (bipolar, 0–Triple the motor rated current) 24: Set frequency (bipolar) 25: Ramp reference frequency (bipolar) 26: Rotational speed (bipolar) 27: Value 2 set through EtherCAT/PROFINET/EtherNet IP communication 28: AO1 from the programmable card 29: AO2 from the programmable card 30: Rotational speed (100% corresponds to twice the motor rated synchronous speed) 31: Output torque (Actual value, 100% corresponds to twice the motor rated torque) 32: AI/AO temperature detection output	

Function code	Name	Description	Default
		33–63: Reserved **Note:** When the output comes from the programmable card (28–29), if the card is a Codesys programmable card, P27.00 must be set to 1. When AO1 is of the current output type, 100% corresponds to 20mA; when AO1 is of the voltage output type, 100% corresponds to 10V; 100% of HDO corresponds to the output of P06.30.	
P06.17	AO1 output lower limit	-300.0%–P06.19	0.0%
P06.18	AO1 output corresponding to lower limit	0.00V–10.00V	0.00V
P06.19	AO1 output upper limit	P06.17–300.0%	100.0%
P06.20	AO1 output corresponding to upper limit	0.00V–10.00V	10.00V
P06.21	AO1 output filter time	0.000s–10.000s	0.000s
P06.22	Reserved	0–65535	0
P06.23	PTC constant output current setting	0.000–20.000mA	4.000mA
P06.24	PTC resistance alarm threshold	0–60000Ω	750Ω
P06.25	PTC resistance alarm recovery threshold	0–60000Ω	150Ω
P06.26	Actual PTC resistance	0–60000Ω	0Ω
P06.27	HDO output lower limit	-300.0%–P06.29	0.0%
P06.28	HDO output corresponding to lower limit	0.00–50.00kHz	0.0kHz
P06.29	HDO output upper limit	P06.27–300.0%	100.0%
P06.30	HDO output corresponding to upper limit	0.00–50.00kHz	50.00kHz
P06.31	HDO output filter time	0.000s–10.000s	0.000s

5.5.11 Digital input

The VFD provides four programmable digital input terminals and two HDI input terminals. All the digital input terminal functions can be programmed by function codes. HDI input terminal can be set to act as high-speed pulse input terminal or common digital input terminal; if it is set to act as high-speed

pulse input terminal, you can also set HDIA or HDIB high-speed pulse input to serve as the frequency reference and encoder signal input.

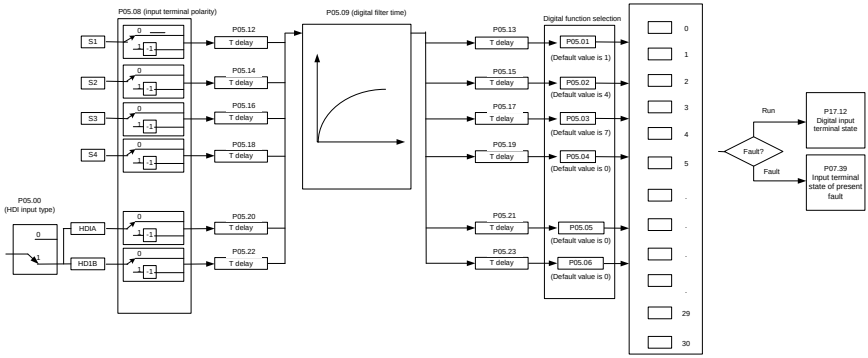

Note: Two different multifunction input terminals cannot be set as the same function.

Setting	Function	Description
0	No function	The VFD does not act even if there is signal input; you can set the unused terminals to "no function" to avoid misacts.
1	Forward running (FWD)	Control the forward/reverse running of the VFD by external terminals.
2	Reverse running (REV)	
3	3-wire control/Sin	Set the VFD running mode to 3-wire control mode by this terminal. See P05.13 for details.
4	Forward jogging	Frequency when jogging, see P08.06, P08.07 and P08.08 for jogging acceleration/deceleration time.
5	Reverse jogging	
6	Coast to stop	The VFD blocks output, and the stop process of motor is uncontrolled by the VFD. This mode is applied in cases of large-inertia load and free stop time; its definition is the same with P01.08, and it is mainly used in remote control.
7	Fault reset	External fault reset function, its function is the same with the STOP/RST key on the keypad. This function can be used in remote fault reset.
8	Running pause	The VFD decelerates to stop, however, all the running parameters are in memory state, such as PLC parameter, wobbling frequency, and PID parameter. After this signal disappears, the VFD will revert to the state before stop.

<table>
<tr><th>Setting</th><th>Function</th><th>Description</th></tr>
<tr><td>9</td><td>External fault input</td><td>When external fault signal is transmitted to the VFD, the VFD releases fault alarm and stops.</td></tr>
<tr><td>10</td><td>Frequency increase (UP)</td><td rowspan="3">Used to change the frequency-increase/decrease command when the frequency is given by external terminals.
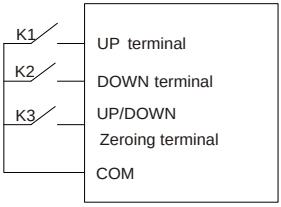

The terminal used to clear frequency-increase/decrease setting can clear the frequency value of auxiliary channel set by UP/DOWN, thus restoring the reference frequency to the frequency given by main reference frequency command channel.</td></tr>
<tr><td>11</td><td>Frequency decrease (DOWN)</td></tr>
<tr><td>12</td><td>Clear frequency increase/decrease setting</td></tr>
<tr><td>13</td><td>Switching between A setting and B setting</td><td rowspan="3">This function is used to switch between the frequency setting channels.
A frequency reference channel and B frequency reference channel can be switched by no. 13 function; the combination channel set by P00.09 and the A frequency reference channel can be switched by no. 14 function; the combination channel set by P00.09 and the B frequency reference channel can be switched by no. 15 function.</td></tr>
<tr><td>14</td><td>Switching between combination setting and A setting</td></tr>
<tr><td>15</td><td>Switching between combination setting and B setting</td></tr>
<tr><td>16</td><td>Multi-step speed terminal 1</td><td rowspan="4">16-step speeds can be set by combining digital states of these four terminals.
Note: Multi-step speed 1 is low bit, multi-step speed 4 is high bit.
<table>
<tr><td>Multi-step speed 4</td><td>Multi-step speed 3</td><td>Multi-step speed 2</td><td>Multi-step speed 1</td></tr>
<tr><td>BIT3</td><td>BIT2</td><td>BIT1</td><td>BIT0</td></tr>
</table></td></tr>
<tr><td>17</td><td>Multi-step speed terminal 2</td></tr>
<tr><td>18</td><td>Multi-step speed terminal 3</td></tr>
<tr><td>19</td><td>Multi-step speed terminal 4</td></tr>
<tr><td>20</td><td>Multi-step speed pause</td><td>Pause multi-step speed selection function to keep the set value in present state.</td></tr>
<tr><td>21</td><td>Acceleration/deceleration time selection 1</td><td>Use these two terminals to select four groups of acceleration/decoration time.</td></tr>
</table>

<table>
<tr><th>Setting</th><th>Function</th><th>Description</th></tr>
<tr><td>22</td><td>Acceleration/deceleration time selection 2</td><td>
<table>
<tr><th>Terminal 1</th><th>Terminal 2</th><th>Acceleration or deceleration time selection</th><th>Corresponding parameter</th></tr>
<tr><td>OFF</td><td>OFF</td><td>Acceleration/ deceleration time 1</td><td>P00.11/P00.12</td></tr>
<tr><td>ON</td><td>OFF</td><td>Acceleration/ deceleration time 2</td><td>P08.00/P08.01</td></tr>
<tr><td>OFF</td><td>ON</td><td>Acceleration/ deceleration time 3</td><td>P08.02/P08.03</td></tr>
<tr><td>ON</td><td>ON</td><td>Acceleration/ deceleration time 4</td><td>P08.04/P08.05</td></tr>
</table>
</td></tr>
<tr><td>23</td><td>Simple PLC stop reset</td><td>Restart simple PLC process and clear previous PLC state information.</td></tr>
<tr><td>24</td><td>Simple PLC pause</td><td>The program pauses during PLC execution, and keeps running in current speed step. After this function is cancelled, simple PLC keeps running.</td></tr>
<tr><td>25</td><td>PID control pause</td><td>PID is ineffective temporarily, and the VFD maintains current frequency output.</td></tr>
<tr><td>26</td><td>Wobbling frequency pause (stop at current frequency)</td><td>The VFD pauses at current output. After this function is canceled, it continues wobbling-frequency operation at current frequency.</td></tr>
<tr><td>27</td><td>Wobbling frequency reset (revert to center frequency)</td><td>The set frequency of VFD reverts to center frequency.</td></tr>
<tr><td>28</td><td>Counter reset</td><td>Zero out the counter state.</td></tr>
<tr><td>29</td><td>Switching between speed control and torque control</td><td>The VFD switches from torque control mode to speed control mode, or vice versa.</td></tr>
<tr><td>30</td><td>Acceleration/deceleration disabled</td><td>Ensure the VFD will not be impacted by external signals (except for stop command), and maintains current output frequency.</td></tr>
<tr><td>31</td><td>Counter trigger</td><td>Enable pulse counting of the counter.</td></tr>
<tr><td>33</td><td>Clear frequency increase/decrease setting temporarily</td><td>When the terminal is closed, the frequency value set by UP/DOWN can be cleared to restore to the frequency given by frequency command channel; when the terminal is disconnected, it will revert to the frequency value after frequency increase/decrease setting.</td></tr>
<tr><td>34</td><td>DC brake</td><td>The VFD starts DC braking immediately after the command becomes valid.</td></tr>
</table>

Setting	Function	Description
35	Switching between motor 1 and motor 2	When this terminal is valid, you can realize switchover control of two motors.
36	Command switches to keypad	When this terminal is valid, the running command channel will switch to keypad compulsorily. If this function becomes invalid, the running command channel will revert to the original state.
37	Command switches to terminal	When this terminal is valid, the running command channel will switch to terminal compulsorily. If this function becomes invalid, the running command channel will revert to the original state.
38	Command switches to communication	When this terminal is valid, the running command channel will switch to communication compulsorily. If this function becomes invalid, the running command channel will revert to the original state.
39	Pre-exciting command	When this terminal is valid, motor pre-exciting will be started until this terminal becomes invalid.
40	Zero out power consumption quantity	After this command becomes valid, the power consumption quantity of the VFD will be zeroed out.
41	Maintain power consumption quantity	When this command is valid, current operation of the VFD will not impact the power consumption quantity.
42	Source of upper torque limit switches to keypad	When this command is valid, the upper limit of the torque will be set by keypad.
43	Position reference point input	Valid only for S2, S3 and S4.
44	Disable spindle orientation	Spindle orientation is invalid.
45	Spindle zeroing/local position zeroing	Spindle positioning is triggered.
46	Spindle zero position selection 1	Spindle zero position selection 1.
47	Spindle zero position selection 2	Spindle zero position selection 2.
48	Spindle scale division selection 1	Spindle scale division selection 1.
49	Spindle scale division selection 2	Spindle scale division selection 2.
50	Spindle scale division selection 3	Spindle scale division selection 3.
51	Position/speed control switchover terminal	Terminal for switching between position control and speed control.

Setting	Function	Description
52	Disable pulse input	Pulse input is invalid when the terminal is valid.
53	Clear position deviation	Used to clear the input deviation of position loop.
54	Switch position proportional gains	Used to switch position proportional gains.
55	Enable cyclic digital positioning	Cyclic positioning can be enabled when digital positioning is valid.
56	Emergency stop	When this command is valid, the motor decelerate to emergency stop as per the time set by P01.26.
57	Motor overtemperature fault input	Motor stops at motor over-temperature fault input.
59	Switch from FVC to SVPWM control	When this terminal is valid in stop state, switch to SVPWM control.
60	Switch to FVC control	When this terminal is valid in stop state, switch to FVC (closed-loop vector) control.
61	PID polarity switchover	Switching the output polarity of PID, this terminal should be used in conjunction with P09.03
62	Reserved	
63	Enable servo	When the thousands place of P21.00 is set to enable the servo, the servo enabling terminal is valid, which controls the VFD to enter zero servo control. At this situation, no startup command is needed.
64	FWD max. limit	Max frequency limit on forward rotation
65	REV max limit	Max frequency limit on reverse rotation
66	Zero out the counter	Zero out the position counting value
67	Pulse increase	When the terminal function is valid, the pulse input is increased according to the P21.27 pulse speed.
68	Enable pulse superimposition	When the pulse superimposition is enabled, pulse increase and pulse decrease are effective.
69	Pulse decrease	When the terminal function is valid, the pulse input is decreased according to the P21.27 pulse speed.
70	Electronic gear selection	If the terminal is valid, the proportional numerator is switched to the P21.30 numerator of the 2nd command ratio.
71	Switch to mater	In stopped state, if the terminal is valid, the master is used.
72	Switch to slave	In stopped state, if the terminal is valid, the slave is used.

Setting	Function	Description
73	Reset roll diameter	Used to reset the roll diameter when the tension control function is enabled.
74	Switch winding/unwinding	Used to switch winding/unwinding modes when the tension control function is enabled.
75	Tension control pre-drive	If the terminal is valid when the tension control function is enabled, tension control pre-drive is performed.
76	Disable roll diameter calculation	If the terminal is valid when the tension control function is enabled, roll diameter calculation is disabled.
77	Clear alarm display	Used to clear the alarm display when the tension control function is enabled.
78	Manual braking of tension control	If the terminal is valid when the tension control function is enabled, manual braking is activated.
79	Trigger forced feeding interrupt	If the terminal is valid when the tension control function is enabled, a feeding interrupt signal is triggered forcibly.
80	Initial roll diameter 1	Used to select different initial roll diameters by combining with the initial roll diameter 2 when the tension control function is enabled.
81	Initial roll diameter 2	Used to select different initial roll diameters by combining with the initial roll diameter 1 when the tension control function is enabled.
82	Trigger fire mode control	In fire mode, if the terminal is valid, the fire mode control signal is triggered.
83	Switch tension PID parameters	Used to switch two PID parameter groups when the tension control function is enabled. The first group is used by default. If the terminal is valid, the second group is used.
84–95	Reserved	/

Related parameter list:

Function code	Name	Description	Default
P05.00	HDI input type	0x00–0x11 Ones: HDIA input type 0: HDIA is high-speed pulse input 1: HDIA is digital input Tens: HDIB input type 0: HDIB is high-speed pulse input 1: HDIB is digital input	0x00

Function code	Name	Description	Default
P05.01	Function of S1 terminal	0: No function 1: Forward running 2: Reverse running 3: 3-wire control/Sin 4: Forward jogging 5: Reverse jogging 6: Coast to stop	1
P05.02	Function of S2 terminal		4
P05.03	Function of S3 terminal		7
P05.04	Function of S4 terminal		0
P05.05	Function of HDIA terminal		0
P05.06	Function of HDIB terminal	7: Fault reset 8: Running pause 9: External fault input 10: Frequency increase (UP) 11: Frequency decrease (DOWN) 12: Clear frequency increase/decrease setting 13: Switchover between setup A and setup B 14: Switchover between combination setting and A setting 15: Switchover between combination setting and setup B 16: Multi-step speed terminal 1 17: Multi-step speed terminal 2 18: Multi-step speed terminal 3 19: Multi-step speed terminal 4 20: Multi-step speed pause 21: Acceleration/deceleration time selection 1 22: Acceleration/deceleration time selection 2 23: Simple PLC stop reset 24: Simple PLC pause 25: PID control pause 26: Wobbling frequency pause 27: Wobbling frequency reset 28: Counter reset 29: Switching between speed control and torque control 30: Acceleration/deceleration disabled	0

Function code	Name	Description	Default
		31: Counter trigger 32: Reserved 33: Clear frequency increase/decrease setting temporarily 34: DC brake 35: Switching between motor 1 and motor 2 36: Command switches to keypad 37: Command switches to terminal 38: Command switches to communication 39: Pre-exciting command 40: Zero out power consumption quantity 41: Maintain power consumption quantity 42: Source of upper torque limit switches to keypad 43: Position reference point input (only valid for S2, S3 and S4) 44: Disable spindle orientation 45: Spindle zeroing/local positioning zeroing 46: Spindle zero position selection 1 47: Spindle zero position selection 2 48: Spindle scale division selection 1 49: Spindle scale division selection 2 50: Spindle scale division selection 3 51: Position/speed control switchover terminal 52: Disable pulse input 53: Clear position deviation 54: Switch position proportional gains 55: Enable cyclic digital positioning 56: Emergency stop 57: Motor overtemperature fault input 59: Switch to V/F control 60: Switch to FVC control 61: PID polarity switchover 62: Reserved 63: Enable servo 64: FWD max. limit 65: REV max limit	

Function code	Name	Description	Default
		66: Zero out the counter 67: Pulse increase 68: Enable pulse superimposition 69: Pulse decrease 70: Electronic gear selection 71: Switch to master 72: Switch to slave 73: Reset the roll diameter 74: Switch winding/unwinding 75: Pre-drive 76: Disable roll diameter calculation 77: Clear alarm display 78: Manual braking 79: Trigger forced feeding interrupt 80: Initial roll diameter 1 81: Initial roll diameter 2 82: Trigger fire mode control 83: Switch tension PID parameters 84–95: Reserved	
P05.07	Reserved		
P05.08	Polarity of input terminal	0x00–0x3F	0x00
P05.09	Digital filter time	0.000–1.000s	0.010s
P05.10	Virtual terminal setting	0x00–0x3F (0: Disable; 1: Enable) BIT0: S1 virtual terminal BIT1: S2 virtual terminal BIT2: S3 virtual terminal BIT3: S4 virtual terminal BIT4: HDIA virtual terminal BIT8: HDIB virtual terminal	0x00
P05.11	2/3-wire control mode	0: 2-wire control 1 1: 2-wire control 2 2: 3-wire control 1 3: 3-wire control 2	0
P05.12	S1 terminal switch-on delay	0.000–50.000s	0.000s
P05.13	S1 terminal switch-off delay	0.000–50.000s	0.000s

Function code	Name	Description	Default
P05.14	S2 terminal switch-on delay	0.000–50.000s	0.000s
P05.15	S2 terminal switch-off delay	0.000–50.000s	0.000s
P05.16	S3 terminal switch-on delay	0.000–50.000s	0.000s
P05.17	S3 terminal switch-off delay	0.000–50.000s	0.000s
P05.18	S4 terminal switch-on delay	0.000–50.000s	0.000s
P05.19	S4 terminal switch-off delay	0.000–50.000s	0.000s
P05.20	HDIA terminal switch-on delay	0.000–50.000s	0.000s
P05.21	HDIA terminal switch-off delay	0.000–50.000s	0.000s
P05.22	HDIB terminal switch-on delay	0.000–50.000s	0.000s
P05.23	HDIB terminal switch-off delay	0.000–50.000s	0.000s
P07.39	Input terminal state of present fault	0x0000–0xFFFF	0x0000
P17.12	Digital input terminal state	0x00–0x3F	0x00

5.5.12 Digital output

The VFD provides two groups of relay output terminals, one open collector Y output terminal and one high-speed pulse output (HDO) terminal. All the digital output terminal functions can be programmed by function codes, of which the high-speed pulse output terminal HDO can also be set to high-speed pulse output or digital output by function code.

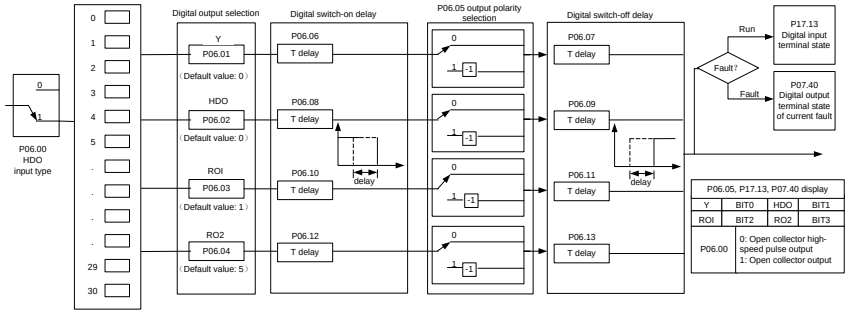

The following table lists the function code options. A same output terminal function can be repeatedly selected.

Set value	Function	Description
0	Invalid	Output terminal has no function
1	In running	Output ON signal when there is frequency output during running
2	In forward running	Output ON signal when there is frequency output during forward running
3	In reverse running	Output ON signal when there is frequency output during reverse running
4	In jogging	Output ON signal when there is frequency output during jogging
5	VFD fault	Output ON signal when VFD fault occurred
6	Frequency level detection FDT1	Refer to P08.32 and P08.33
7	Frequency level detection FDT2	Refer to P08.34 and P08.35
8	Frequency reached	Refer to P08.36
9	Running in zero speed	Output ON signal when the VFD output frequency and reference frequency are both zero.
10	Reach upper limit frequency	Output ON signal when the running frequency reaches upper limit frequency

Set value	Function	Description
11	Reach lower limit frequency	Output ON signal when the running frequency reached lower limit frequency
12	Ready to run	Main circuit and control circuit powers are established, the protection functions do not act; when the VFD is ready to run, output ON signal.
13	In pre-exciting	Output ON signal during pre-exciting of the VFD
14	Overload pre-alarm	Output ON signal after the pre-alarm time elapsed based on the pre-alarm threshold; see P11.08–P11.10 for details.
15	Underload pre-alarm	Output ON signal after the pre-alarm time elapsed based on the pre-alarm threshold; see P11.11–P11.12 for details.
16	Simple PLC state completed	Output signal when current stage of simple PLC is completed
17	Simple PLC cycle completed	Output signal when a single cycle of simple PLC operation is completed
23	Virtual terminal output of Modbus/Modbus TCP communication	Output corresponding signal based on the set value of Modbus/Modbus TCP; output ON signal when it is set to 1, output OFF signal when it is set to 0
24	Virtual terminal output of POROFIBUS/CANopen/DeviceNet communication	Output corresponding signal based on the set value of POROFIBUS/CANopen/DeviceNet; output ON signal when it is set to 1, output OFF signal when it is set to 0
25	Virtual terminal output of Ethernet communication	Output corresponding signal based on the set value of Ethernet; output ON signal when it is set to 1, output OFF signal when it is set to 0.
26	DC bus voltage established	Output is valid when the bus voltage is above the undervoltage threshold of the inverter

Set value	Function	Description
27	Z pulse output	Output is valid when the encoder Z pulse is arrived, and is invalid after 10 ms.
28	During pulse superposition	Output is valid when the pulse superposition terminal input function is valid
29	STO action	Output when STO fault occurred
30	Positioning completed	Output is valid when position control positioning is completed
31	Spindle zeroing completed	Output is valid when spindle zeroing is completed
32	Spindle scale-division completed	Output is valid when spindle scale-division is completed
33	In speed limit	Output is valid when the frequency is limited
34	Virtual terminal output of EtherCAT/PROFINET/ EtherNet IP communication	The corresponding signal is output according to the set value of PROFINET communication. When it is set to 1, the ON signal is output, and when it is set to 0, the OFF signal is output.
35	Reserved	
36	Speed/position control switchover completed	Output is valid when the mode switchover is completed
37	Any frequency reached	The frequency reached signal is output when the present ramp reference frequency is greater than the detection value for frequency being reached.
38–40	Reserved	
41	Y1	Y1 from the programmable card
42	Y2	Y2 from the programmable card
43	HDO	HDO from the programmable card
44	RO1	RO1 from the programmable card

Set value	Function	Description
45	RO2	RO2 from the programmable card
46	RO3	RO3 from the programmable card
47	RO4	RO4 from the programmable card
48	EC PT100 detected OH pre-alarm	Pre-alarm of overheating (OH) detected by the expansion card (EC) with PT100.
49	EC PT1000 detected OH pre-alarm	Pre-alarm of OH detected by the EC with PT1000.
50	AI/AO detected OH pre-alarm	Pre-alarm of OH detected by AI/AO.
51	Stopped or running at zero speed	The VFD is in stopped state or running at zero speed.
52	Disconnection detected in tension control	Disconnection is detected when the disconnection detection is enabled in tension control.
53	Roll diameter setting reached	The set roll diameter is reached during running in tension control.
54	Max. roll diameter reached	The max. roll diameter is reached during running in tension control.
55	Min. roll diameter reached	The min. roll diameter is reached during running in tension control.
56	Fire control mode enabled	The fire mode is turned on.
57–63	Reserved	

Related parameter list:

Function code	Name	Description	Default
P06.00	HDO output type	0: Open collector high-speed pulse output 1: Open collector output	0
P06.01	Y1 output selection	0: Invalid 1: In running 2: In forward running	0
P06.02	HDO output selection		0
P06.03	RO1 output selection		1

Function code	Name	Description	Default
P06.04	RO2 output selection	3: In reverse running 4: In jogging 5: VFD fault 6: Frequency level detection FDT1 7: Frequency level detection FDT2 8: Frequency reached 9: Running in zero speed 10: Reach upper limit frequency 11: Reach lower limit frequency 12: Ready to run 13: In pre-exciting 14: Overload pre-alarm 15: Underload pre-alarm 16: Simple PLC stage completed 17: Simple PLC cycle completed 18: Reach set counting value 19: Reach designated counting value 20: External fault is valid 21: Reserved 22: Reach running time 23: Virtual terminal output of Modbus/Modbus TCP communication 24: Virtual terminal output of POROFIBUS/CANopen/DeviceNet communication 25: Virtual terminal output of Ethernet communication 26: DC bus voltage established 27: Z pulse output 28: During pulse superposition 29: STO action 30: Positioning completed 31: Spindle zeroing completed 32: Spindle scale-division completed 33: Speed limit reached in torque control 34: Virtual terminal output of EtherCAT/PROFINET/EtherNet IP communication	5

Function code	Name	Description	Default
		35: Reserved 36: Speed/position control switchover completed 37: Any frequency reached 38–40: Reserved 41: Y1 from the programmable card 42: Y2 from the programmable card 43: HDO from the programmable card 44: RO1 from the programmable card 45: RO2 from the programmable card 46: RO3 from the programmable card 47: RO4 from the programmable card 48: EC PT100 detected OH pre-alarm 49: EC PT1000 detected OH pre-alarm 50: AI/AO detected OH pre-alarm 51: Stopped or running at zero speed 52: Disconnection detected in tension control 53: Roll diameter setting reached 54: Max. roll diameter reached 55: Min. roll diameter reached 56: Fire control mode enabled 57–63: Reserved	
P06.05	Output terminal polarity selection	0x00–0x0F	0x00
P06.06	Y1 switch-on delay	0.000–50.000s	0.000s
P06.07	Y1 switch-off delay	0.000–50.000s	0.000s
P06.08	HDO switch-on delay	0.000–50.000s (valid only when P06.00=1)	0.000s
P06.09	HDO switch-off delay	0.000–50.000s (valid only when P06.00=1)	0.000s
P06.10	RO1 switch-on delay	0.000–50.000s	0.000s
P06.11	RO1 switch-off delay	0.000–50.000s	0.000s
P06.12	RO2 switch-on delay	0.000–50.000s	0.000s
P06.13	RO2 switch-off delay	0.000–50.000s	0.000s
P07.40	Output terminal status at present fault		0
P17.13	Digital output terminal status		0

5.5.13 Simple PLC

Simple PLC is a multi-step speed generator, and the VFD can change the running frequency and direction automatically based on the running time to fulfill process requirements. Previously, such function was realized with external PLC, while now, the VFD itself can achieve this function.

The VFD can realize 16-step speeds control, and provide four groups of acceleration/deceleration time for you to choose.

After the set PLC completes one cycle (or one segment), one ON signal can be output by the multifunction relay.

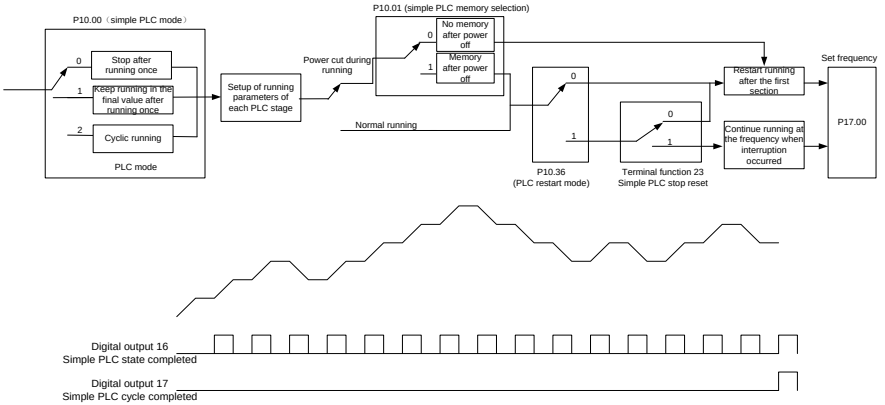

Related parameter list:

Function code	Name	Description	Default
P05.01–P05.06	Digital input function selection	23: Simple PLC stop reset 24: Pause simple PLC 25: Pause PID control	
P06.01–P06.04	Digital output function selection	16: Simple PLC stage reached 17: Simple PLC cycle reached	
P10.00	Simple PLC mode	0: Stop after running once 1: Keep running in the final value after running once 2: Cyclic running	0
P10.01	Simple PLC memory selection	0: No memory after power off 1: Memory after power off	0
P10.02	Multi-step speed 0	-300.0–300.0%	0.0%
P10.03	Running time of step 0	0.0–6553.5s (min)	0.0s

Function code	Name	Description	Default
P10.04	Multi-step speed 1	-300.0–300.0%	0.0%
P10.05	Running time of step 1	0.0–6553.5s (min)	0.0s
P10.06	Multi-step speed 2	-300.0–300.0%	0.0%
P10.07	Running time of step 2	0.0–6553.5s (min)	0.0s
P10.08	Multi-step speed 3	-300.0–300.0%	0.0%
P10.09	Running time of step 3	0.0–6553.5s (min)	0.0s
P10.10	Multi-step speed 4	-300.0–300.0%	0.0%
P10.11	Running time of step 4	0.0–6553.5s (min)	0.0s
P10.12	Multi-step speed 5	-300.0–300.0%	0.0%
P10.13	Running time of step 5	0.0–6553.5s (min)	0.0s
P10.14	Multi-step speed 6	-300.0–300.0%	0.0%
P10.15	Running time of step 6	0.0–6553.5s (min)	0.0s
P10.16	Multi-step speed 7	-300.0–300.0%	0.0%
P10.17	Running time of step 7	0.0–6553.5s (min)	0.0s
P10.18	Multi-step speed 8	-300.0–300.0%	0.0%
P10.19	Running time of step 8	0.0–6553.5s (min)	0.0s
P10.20	Multi-step speed 9	-300.0–300.0%	0.0%
P10.21	Running time of step 9	0.0–6553.5s (min)	0.0s
P10.22	Multi-step speed 10	-300.0–300.0%	0.0%
P10.23	Running time of step 10	0.0–6553.5s (min)	0.0s
P10.24	Multi-step speed 11	-300.0–300.0%	0.0%
P10.25	Running time of step 11	0.0–6553.5s (min)	0.0s
P10.26	Multi-step speed 12	-300.0–300.0%	0.0%
P10.27	Running time of step 12	0.0–6553.5s (min)	0.0s
P10.28	Multi-step speed 13	-300.0–300.0%	0.0%
P10.29	Running time of step 13	0.0–6553.5s (min)	0.0s
P10.30	Multi-step speed 14	-100.0–100.0%	0.0%
P10.31	Running time of step 14	0.0–6553.5s (min)	0.0s
P10.32	Multi-step speed 15	-300.0–300.0%	0.0%
P10.33	Running time of step 15	0.0–6553.5s (min)	0.0s
P10.34	ACC/DEC time of steps 0–7 of simple PLC	0x0000–0xFFFF	0x0000
P10.35	ACC/DEC time of steps 8–15 of simple PLC	0x0000–0xFFFF	0x0000
P10.36	PLC restart mode	0: Restart from step 0 in multi-step speed running	0

Function code	Name	Description	Default
		1: Resume from the paused step	
P17.00	Set frequency	0.00Hz–P00.03 (Max. output frequency)	0.00Hz
P17.27	Simple PLC and present stage number of multi-step speed	Displays the present stage of the simple PLC function.	0

5.5.14 Multi-step speed running

The VFD can set 16-step speeds, which are selectable by multi-step speed terminals 1–4, corresponding to multi-step speed 0 to multi-step speed 15.

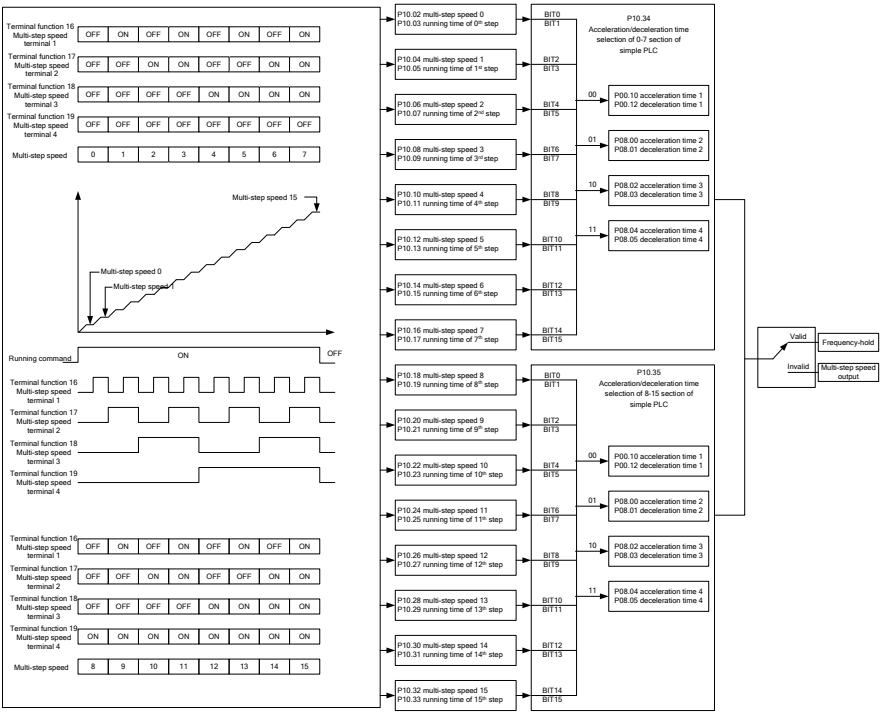

Related parameter list:

Function code	Name	Description	Default
P05.01–P05.06	Digital input function selection	16: Multi-step speed terminal 1 17: Multi-step speed terminal 2 18: Multi-step speed terminal 3 19: Multi-step speed terminal 4	

Function code	Name	Description	Default
		20: Pause multi-step speed running	
P10.02	Multi-step speed 0	-300.0–300.0%	0.0%
P10.03	Running time of step 0	0.0–6553.5s (min)	0.0s
P10.04	Multi-step speed 1	-300.0–300.0%	0.0%
P10.05	Running time of step 1	0.0–6553.5s (min)	0.0s
P10.06	Multi-step speed 2	-300.0–300.0%	0.0%
P10.07	Running time of step 2	0.0–6553.5s (min)	0.0s
P10.08	Multi-step speed 3	-300.0–300.0%	0.0%
P10.09	Running time of step 3	0.0–6553.5s (min)	0.0s
P10.10	Multi-step speed 4	-300.0–300.0%	0.0%
P10.11	Running time of step 4	0.0–6553.5s (min)	0.0s
P10.12	Multi-step speed 5	-300.0–300.0%	0.0%
P10.13	Running time of step 5	0.0–6553.5s (min)	0.0s
P10.14	Multi-step speed 6	-300.0–300.0%	0.0%
P10.15	Running time of step 6	0.0–6553.5s (min)	0.0s
P10.16	Multi-step speed 7	-300.0–300.0%	0.0%
P10.17	Running time of step 7	0.0–6553.5s (min)	0.0s
P10.18	Multi-step speed 8	-300.0–300.0%	0.0%
P10.19	Running time of step 8	0.0–6553.5s (min)	0.0s
P10.20	Multi-step speed 9	-300.0–300.0%	0.0%
P10.21	Running time of step 9	0.0–6553.5s (min)	0.0s
P10.22	Multi-step speed 10	-300.0–300.0%	0.0%
P10.23	Running time of step 10	0.0–6553.5s (min)	0.0s
P10.24	Multi-step speed 11	-300.0–300.0%	0.0%
P10.25	Running time of step 11	0.0–6553.5s (min)	0.0s
P10.26	Multi-step speed 12	-300.0–300.0%	0.0%
P10.27	Running time of step 12	0.0–6553.5s (min)	0.0s
P10.28	Multi-step speed 13	-300.0–300.0%	0.0%
P10.29	Running time of step 13	0.0–6553.5s (min)	0.0s
P10.30	Multi-step speed 14	-300.0–300.0%	0.0%
P10.31	Running time of step 14	0.0–6553.5s (min)	0.0s

Function code	Name	Description	Default
P10.32	Multi-step speed 15	-300.0–300.0%	0.0%
P10.33	Running time of step 15	0.0–6553.5s (min)	0.0s
P10.34	ACC/DEC time of steps 0–7 of simple PLC	0x0000–0xFFFF	0x0000
P10.35	ACC/DEC time of steps 8–15 of simple PLC	0x0000–0xFFFF	0x0000
P17.27	Simple PLC and present stage number of multi-step speed	Displays the present stage of the simple PLC function.	0

5.5.15 PID control

PID control, a common mode for process control, is mainly used to adjust the VFD output frequency or output voltage through performing scale-division, integral and differential operations on the difference between feedback signal of controlled variables and signal of the target, thus forming a negative feedback system to keep the controlled variables above the target. It is suitable for flow control, pressure control, temperature control, etc. Diagram of basic principles for output frequency regulation is shown in the figure below.

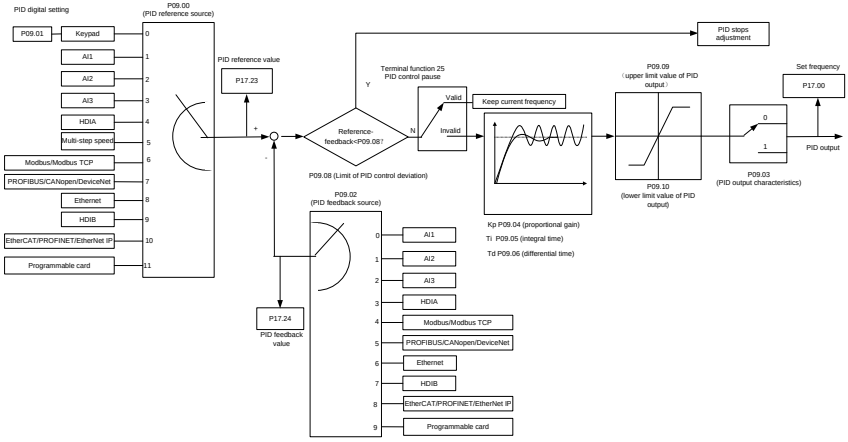

Introduction to the working principles and control methods for PID control

Proportional control (Kp): When the feedback is different from the reference, the output will be proportional to the difference. If such a difference is constant, the regulating variable will also be constant. Proportional control can respond to feedback changes rapidly, however, it cannot eliminate the difference by itself. A larger proportional gain indicates a faster regulating speed, but a too large gain will result in oscillation. To solve this problem, set the integral time to a large value and the differential time to 0, run the system only with proportional control, and then change the reference to

observe the difference (that is, static difference) between the feedback signal and reference. If the static difference occurs in the direction of reference change (such as reference increase, where the feedback is always less than the reference after system stabilizes), continue increasing the proportional gain; otherwise, decrease the proportional gain. Repeat this process until the static difference becomes small.

Integral time (Ti): When feedback deviates from reference, the output regulating variable accumulates continuously, if the deviation persists, the regulating variable will increase continuously until deviation disappears. Integral regulator can be used to eliminate static difference; however, too large regulation may lead to repetitive overshoot, which will cause system instability and oscillation. The feature of oscillation caused by strong integral effect is that the feedback signal fluctuates up and down based on the reference variable, and fluctuation range increases gradually until oscillation occurred. Integral time parameter is generally regulated gradually from large to small until the stabilized system speed fulfills the requirement.

Derivative time (Td): When the deviation between feedback and reference changes, output the regulating variable which is proportional to the deviation variation rate, and this regulating variable is only related to the direction and magnitude of the deviation variation rather than the direction and magnitude of the deviation itself. Differential control is used to control the feedback signal variation based on the variation trend. Differential regulator should be used with caution as it may easily enlarge the system interferences, especially those with high variation frequency.

When the frequency command selection (P00.06, P00.07) is 7 or the voltage setting channel selection (P04.27) is 6, the VFD is process PID controlled.

5.5.15.1 General procedures for PID parameter settings

a. Determining proportional gain P

When determining proportional gain P, first, remove the integral term and derivative term of PID by making Ti=0 and Td=0 (see PID parameter setup for details), thus turning PID into pure proportional control. Set the input to 60%–70% of the max. allowable value, and increase proportional gain P gradually from 0 until system oscillation occurred, and then in turn, decrease proportional gain P gradually from current value until system oscillation disappears, record the proportional gain P at this point and set the proportional gain P of PID to 60%–70% of current value. This is whole commissioning process of proportional gain P.

b. Determine integral time Ti

After proportional gain P is determined, set the initial value of a larger integral time Ti, and decrease Ti gradually until system oscillation occurred, and then in turn, increase Ti until system oscillation disappears, record the Ti at this point, and set the integral time constant Ti of PID to 150%–180% of current value. This is the commissioning process of integral time constant Ti.

c. Determining derivative time Td

The derivative time Td is generally set to 0.

If you need to set Td to another value, set in the same way with P and Ti, namely set Td to 30% of the value when there is no oscillation.

d. Empty system load, perform load-carrying joint debugging, and then fine-tune PID parameter until fulfilling the requirement.

5.5.15.2 PID adjusting methods

After setting the parameters controlled by PID, you can adjust these parameters by the following means.

Control overshoot: When overshoot occurred, shorten the derivative time (Td) and prolong integral time (Ti).

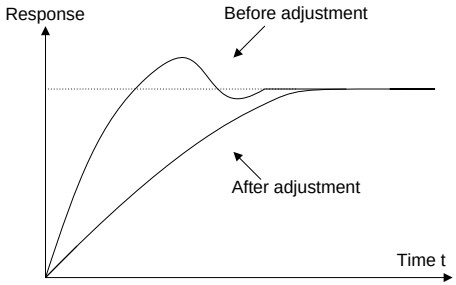

Stabilize the feedback value as fast as possible: when overshoot occurred, shorten integral time (Ti) and prolong derivative time (Td) to stabilize control as fast as possible.

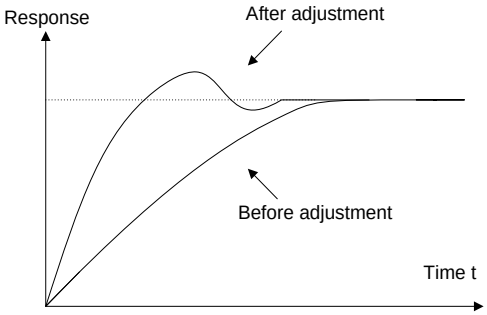

Control long-term vibration: If the cycle of periodic vibration is longer than the set value of integral time (Ti), it indicates the integral action is too strong, prolong the integral time (Ti) to control vibration.

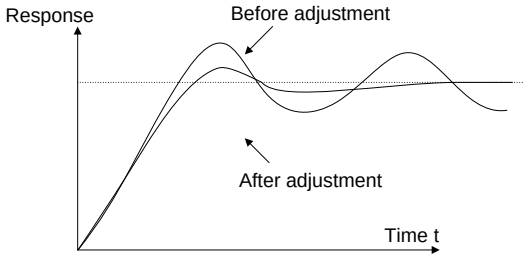

Control short-term vibration: If the vibration cycle is short is almost the same with the set value of derivative time (Td), it indicates derivative action is too strong, shorten the derivative time (Td) to control vibration. When derivative time (Td) is set to 0.00 (namely no derivative control), and there is no way to control vibration, decrease the proportional gain.

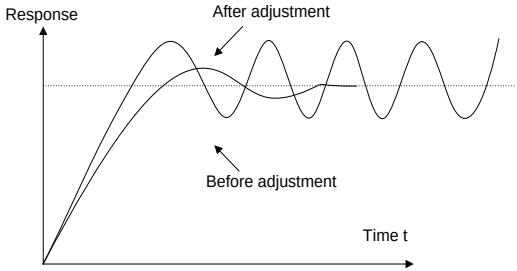

Related parameter list:

Function code	Name	Description	Default
P09.00	PID reference source	0: Set by P09.01 1: AI1 2: AI2 3: AI3 4: High-speed pulse HDIA 5: Multi-step running 6: Modbus/Modbus TCP communication 7: PROFIBUS/CANopen/DevicneNET communication 8: Ethernet communication 9: High-speed pulse HDIB communication 10: EtherCAT/PROFINET/EtherNet IP communication 11: Programmable card 12: Reserved	0

Function code	Name	Description	Default
P09.01	PID digital setting	-100.0%–100.0%	0.0%
P09.02	PID feedback source	0: AI1 1: AI2 2: AI3 3: High-speed pulse HDIA 4: Modbus/Modbus TCP communication 5: PROFIBUS/CANopen/DevicneNET communication 6: Ethernet communication 7: High-speed pulse HDIB 8: EtherCAT/PROFINET/EtherNet IP communication 9: Programmable card 10: Reserved	0
P09.03	PID output characteristics selection	0: PID output is positive characteristic 1: PID output is negative characteristic	0
P09.04	Proportional gain (Kp)	0.00–100.00	1.80
P09.05	Integral time (Ti)	0.01–10.00s	0.90s
P09.06	Differential time (Td)	0.00–10.00s	0.00s
P09.07	Sampling period (T)	0.001–1.000s	0.100s
P09.08	PID control deviation limit	0.0–100.0%	0.0%
P09.09	PID output upper limit	P09.10–100.0% (max. frequency or voltage)	100.0%
P09.10	PID output lower limit	-100.0%–P09.09 (max. frequency or voltage)	0.0%
P09.11	Feedback offline detection value	0.0–100.0%	0.0%
P09.12	Feedback offline detection time	0.0–3600.0s	1.0s
P09.13	PID control selection	0x0000–0x1111 Ones place: 0: Continue integral control after the frequency reaches upper/lower limit 1: Stop integral control after the frequency reaches upper/lower limit	0x0001

Function code	Name	Description	Default
		Tens place: 0: The same with the main reference direction 1: Contrary to the main reference direction Hundreds place: 0: Limit as per the max. frequency 1: Limit as per A frequency Thousands place: 0: A+B frequency, acceleration /deceleration of main reference A frequency source buffering is invalid 1: A+B frequency, acceleration/ deceleration of main reference A frequency source buffering is valid, acceleration/deceleration is determined by P08.04 (acceleration time 4).	
P09.14	Low frequency proportional gain (Kp)	0.00–100.00	1.00
P09.15	ACC/DEC time of PID command	0.0–1000.0s	0.0s
P09.16	PID output filter time	0.000–10.000s	0.000s
P09.17	Reserved		
P09.18	Low frequency integral time (Ti)	0.00–10.00s	0.90s
P09.19	Low frequency differential time (Td)	0.00–10.00s	0.00s
P09.20	Low frequency point for PID parameter switching	0.00Hz–P09.21	5.00Hz
P09.21	High frequency point for PID parameter switching	P09.20–P00.03	10.00Hz
P17.00	Set frequency	0.00Hz–P00.03 (Max. output frequency)	0.00Hz
P17.23	PID reference value	-100.0–100.0%	0.0%
P17.24	PID feedback value	-100.0–100.0%	0.0%

5.5.16 Running at wobbling frequency

Wobbling frequency is mainly applied in cases where transverse movement and winding functions are needed like textile and chemical fiber industries. The typical working process is shown as below.

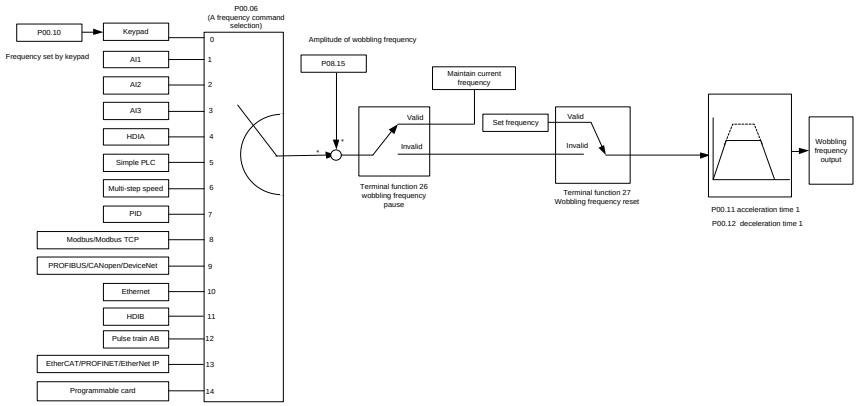

Function code	Name	Description	Default
P00.03	Max. output frequency	Max (P00.04, 10.00)–590.00Hz	50.00Hz
P00.06	Setting channel of A frequency command	0: Keypad 1: AI1 2: AI2 3: AI3 4: High-speed pulse HDIA 5: Simple PLC program 6: Multi-step speed running 7: PID control 8: Modbus/Modbus TCP communication 9: PROFIBUS/CANopen/DeviceNet communication 10: Ethernet communication 11: High-speed pulse HDIB 12: Pulse train AB 13: EtherCAT/PROFINET/EtherNet IP communication 14: Programmable card	0
P00.11	ACC time 1	0.0–3600.0s	Model depended
P00.12	DEC time 1	0.0–3600.0s	Model depended
P05.01–P05.06	Digital input function selection	26: Wobbling frequency pause (stop at current frequency) 27: Wobbling frequency reset (revert to	

Function code	Name	Description	Default
		center frequency)	
P08.15	Amplitude of wobbling frequency	0.0–100.0% (relative to set frequency)	0.0%
P08.16	Amplitude of jump frequency	0.0–50.0% (relative to amplitude of wobbling frequency)	0.0%
P08.17	Wobbling frequency rise time	0.1–3600.0s	5.0s
P08.18	Wobbling frequency fall time	0.1–3600.0s	5.0s

5.5.17 Local encoder input

The VFD supports pulse count function by inputting the count pulse from HDI high-speed pulse port. When the actual count value is no less than the set value, digital output terminal will output count-value-reached pulse signal, and the corresponding count value will be zeroed out.

Function code	Name	Description	Default
P05.00	HDI input type	0x00–0x11 Ones: HDIA input type 0: HDIA is high-speed pulse input 1: HDIA is digital input Tens: HDIB input type 0: HDIB is high-speed pulse input 1: HDIB is digital input	0x00
P05.38	HDIA high-speed pulse input function	0: Set input via frequency 1: Reserved 2: Input via encoder, used in combination with HDIB	0
P05.44	HDIB high-speed pulse input function selection	0: Set input via frequency 1: Reserved 2: Input via encoder, used in combination with HDIA	0
P18.00	Actual frequency of encoder	-999.9–3276.7Hz	0.0Hz
P20.15	Speed measurement mode	0: PG card 1: Local; realized by HDIA and HDIB; supports incremental 24V encoder only	0

5.5.18 Commissioning procedures for closed-loop control, position control and spindle positioning

1. Commissioning procedures for closed-loop vector control of asynchronous motor

Step 1: Restore to default value via keypad

Step 2: Set P00.03, P00.04 and P02 group motor nameplate parameters

Step 3: Motor parameter autotuning

Carry out rotary parameter autotuning or static parameter autotuning via keypad, if the motor can be disconnected from load, then it is users can carry out rotary parameter autotuning; otherwise, carry out static parameter autotuning, the parameter obtained from autotuning will be saved in P02 motor parameter group automatically.

Step 4: Verify whether the encoder is installed and set properly

a) Confirm the encoder direction and parameter setup

Set P20.01 (encoder pulse-per-revolution), set P00.00=2 and P00.10=20.00Hz, and run the VFD, at this point, the motor rotates at 20.00Hz, observe whether the speed measurement value of P18.00 is correct, if the value is negative, it indicates the encoder direction is reversed, under such situation, set P20.02 to 1; if the speed measurement value deviates greatly, it indicates P20.01 is set improperly. Observe whether P18.02 (encoder Z pulse count value) fluctuates, if yes, it indicates the encoder suffers interference or P20.01 is set improperly, requiring users to check the wiring and the shielding layer.

b) Determine Z pulse direction

Set P00.10=20.00Hz, and set P00.13 (running direction) to forward and reverse direction respectively to observe whether the difference value of P18.02 is less than 5, if the difference value remains to be larger than 5 after setting Z pulse reversal function of P20.02, power off and exchange phase A and phase B of the encoder, and then observe the difference between the value of P18.02 during forward and reverse rotation. Z pulse direction only affects the forward/reverse positioning precision of the spindle positioning carried out with Z pulse.

Step 5: Closed-loop vector pilot-run

Set P00.00=3, and carry out closed-loop vector control, adjust P00.10 and speed loop and current loop PI parameter in P03 group to make it run stably in the whole range.

Step 6: Flux-weakening control

Set flux-weakening regulator gain P03.26=0–8000, and observe the flux-weakening control effect. P03.22–P03.24 can be adjusted as needed.

2. Commissioning procedures for closed-loop vector control of synchronous motor

Step 1: Set P00.18=1, restore to default value

Step 2: Set P00.00=3 (FVC), set P00.03, P00.04, and motor nameplate parameters in P02 group.

Step 3: Set P20.01 encoder parameter.

When the encoder is resolver-type encoder, set the encoder pulse count value to (resolver pole pair number × 1024), e.g., if pole pair number is 4, set P20.01 to 4096.

Step 4: Ensure the encoder is installed and set correctly

When motor stops, observe whether P18.21 (resolver angle) fluctuates, if it fluctuates sharply, check the wiring and grounding. Rotates the motor slowly, observe whether P18.21 changes accordingly. If yes, it indicates motor is connected correctly; if the value of P18.02 keeps constant at a non-zero value after rotating for multiple circles, it indicates encoder Z signal is correct.

Step 5: Autotuning of initial position of magnetic pole

Set P20.11=2 or 3 (3: rotary autotuning; 2: static autotuning), press RUN key to run the VFD.

a) Rotary autotuning (P20.11 = 3)

Detect the position of current magnetic pole when autotuning starts, and then accelerates to 10Hz, autotuning corresponding magnetic pole position of encoder Z pulse, and decelerate to stop.

During running, if ENC1o or ENC1d fault occurred, set P20.02=1 and carry out autotuning again.

After autotuning is done, the angle obtained from autotuning will be saved in P20.09 and P20.10 automatically.

b) Static autotuning

In cases where the load can be disconnected, it is recommended to adopt rotary autotuning (P20.11=3) as it has high angle precision. If the load cannot be disconnected, users can adopt static autotuning (P20.11=2). The magnetic pole position obtained from autotuning will be saved in P20.09 and P20.10.

Step 6: Closed-loop vector pilot-run

Adjust P00.10 and speed loop and current loop PI parameter in P03 group to make it run stably in the whole range. If oscillation occurred, reduce the value of P03.00, P03.03, P03.09 and P03.10. If current oscillation noise occurred during low speed, adjust P20.05.

Note: It is necessary to re-determine P20.02 (encoder direction) and carry out magnetic pole position autotuning again if the wiring of motor or encoder is changed.

3. Commissioning procedures for pulse train control

Pulse input is operated based on closed-loop vector control; speed detection is needed in the subsequent spindle positioning, zeroing operation and division operation.

Step 1: Restore to default value by keypad

Step 2: Set P00.03, P00.04 and motor nameplate parameters in P02 group

Step 3: Motor parameter autotuning: rotary parameter autotuning or static parameter autotuning

Step 4: Verity the installation and settings of encoder. Set P00.00=3 and P00.10=20.00Hz to run the system, and check the control effect and performance of the system.

Step 5: Set P21.00=0001 to set positioning mode to position control, namely pulse-string control. There are four kinds of pulse command modes, which can be set by P21.01 (pulse command mode).

Under position control mode, you can check high-order bit and low-order bit of position reference and feedback, P18.02 (count value of Z pulse), P18.00 (actual frequency of encoder), P18.17 (pulse command frequency) and P18.19 (position regulator output) via P18, through which users can figure out the relation between P18.08 (position of position reference point) and P18.02, pulse command frequency P18.17, feedforward P18.18 and position regulator output P18.19.

Step 6: The position regulator has two gains, namelyP21.02 and P21.03, and they can be switched by speed command, torque command and terminals.

Step 7: When P21.08 (output limit of position controller) is set to 0, the position control will be invalid, and at this point, the pulse train acts as frequency source, P21.13 (position feedforward gain) should be set to 100%, and the speed acceleration/deceleration time is determined by the acceleration /deceleration time of pulse train, the pulse train acceleration/deceleration time of the system can be adjusted. If the pulse train acts as the frequency source in speed control, users can also set P21.00 to 0000, and set the frequency source reference P00.06 or P00.07 to 12 (set by pulse train AB), at this point, the acceleration/deceleration time is determined by the acceleration/deceleration time of the VFD, meanwhile, the parameters of pulse train AB is still set by P21 group. In speed mode, the filter time of pulse train AB is determined by P21.29.

Step 8: The input frequency of pulse train is the same with the feedback frequency of encoder pulse, the relation between them can be changed by altering P21.11 (numerator of position command ratio) and P21.12 (denominator of position command ratio)

Step 9: When running command or servo enabling is valid (by setting P21.00 or terminal function 63), it will enter pulse train servo running mode.

4. Commissioning procedures for spindle positioning

Spindle orientation is to realize orientation functions like zeroing and division based on closed-loop vector control

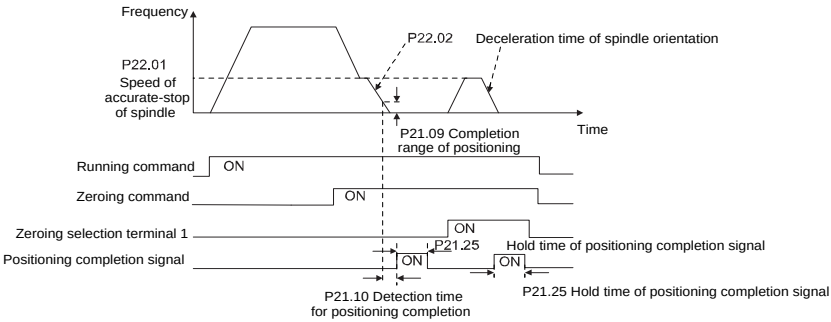

Step 1–4: These four steps are the same with the first four steps of the commissioning procedures for closed-loop vector control, which aim to fulfill the control requirements of closed-loop vector control, thus realizing spindle positioning function in either position control or speed control mode.

Step 5: Set P22.00.bit0=1 to enable spindle positioning, set P22.00.bit1 to select spindle zero input. If the system adopts encoder for speed measurement, set P22.00.bit1 to 0 to select Z pulse input; if the system adopts photoelectric switch for speed measurement, set P22.00.bit1 to 1 to select photoelectric switch as zero input; set P22.00.bit2 to select zero search mode, set P22.00.bit3 to enable or disable zero calibration, and select zero calibration mode by setting P22.00.bit7.

Step 6: Spindle zeroing operation

a) Select the positioning direction by setting P22.00.bit4.

b) There are four zero positions in P22 group, users can choose one out of four zeroing positions by setting zeroing input terminal selection (46, 47) in P05 group. When executing zeroing function, the motor will stop accurately at corresponding zeroing position according to the set positioning direction, which can be viewed via P18.10.

c) The positioning length of spindle zeroing is determined by the deceleration time of accurate-stop and the speed of accurate-stop.

Step 7: Spindle division operation

There are seven scale-division positions in P22 group, users can choose one out of seven scale-division positions by setting scale-division input terminal selection (48, 49, 50) in P05 group. Enable corresponding scale-division terminal after the motor stops accurately, and the motor will check the scale-division position state and switch to corresponding position incrementally, at this point, users can check P18.09.

Step 8: Priority level of speed control, position control and zeroing

The priority level of speed running is higher than that of the scale division, when the system runs in scale-division mode, if spindle orientation is prohibited, the motor will turn to speed mode or position mode.

The priority level of zeroing is higher than that of the scale division.

Scale-division command is valid when the scale-division terminal is from 000 state to non-000 state, e.g., in 000–011, the spindle executes scale division 3. The transition time during terminal switchover needs to be less than 10ms; otherwise, wrong scale division command may be executed.

Step 9: Hold positioning

The position loop gain during positioning is P21.03; while the position loop gain in positioning-completion-hold state is P21.02. In order to keep sufficient position-hold force and ensure no system oscillation occurred, adjust P03.00, P03.01, P20.05, and P21.02.

Step 10: Positioning command selection (bit6 of P22.00)

Electric level signal: Positioning command (zeroing and scale division) can be executed only when there is running command or the servo is enabled.

Step 11: Spindle reference point selection (bit0 of P22.00)

Encoder Z pulse positioning supports the following spindle positioning modes:

a) The encoder is installed on the motor shaft, the motor shaft and spindle is 1:1 rigid connection;

b) The encoder is installed on the motor shaft, the motor shaft and spindle is 1:1 belt connection;

At this point, the belt may slip during high-speed running and cause inaccurate positioning, it is recommended to install proximity switch on the spindle.

c) The encoder is installed on the spindle, and the motor shaft is connected to the spindle with belt, the drive ratio is not necessarily 1:1.

At this point, set P20.06 (speed ratio of the mounting shaft between motor and encoder), and set P22.14 (spindle drive ratio) to 1. As the encoder is not installed on the motor, the control performance of closed-loop vector will be affected.

Proximity switch positioning supports the following spindle positioning modes:

a) The encoder is installed on the motor shaft, the drive ratio between motor shaft and spindle is not necessarily 1:1;

At this point, it is required to set P22.14 (spindle drive ratio).

5. Commissioning procedures for digital positioning

The diagram for digital positioning is shown below.

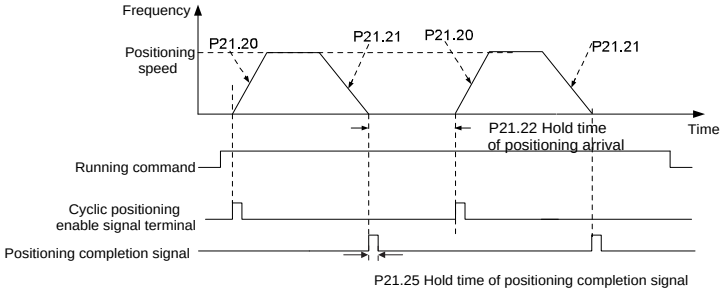

Step 1–4: These four steps are the same with the first four steps of the commissioning procedures for closed-loop vector control, which aim to fulfill the control requirements of closed-loop vector control.

Step 5: Set P21.00=0011 to enable digital positioning. Set P21.17, P21.11 and P21.12 (set positioning displacement) according to actual needs; set P21.18 and P21.19 (set positioning speed); set P21.20 and P21.21 (set acceleration/deceleration time of positioning).

Step 6: Single positioning operation

Set P21.16.bit1=0, and the motor will carry out single positioning action and stay in the positioning position according to the setup in step 5.

Step 7: Cyclic positioning operation

Set P21.16.bit1=1 to enable cyclic positioning. The cyclic positioning is divided into continuous mode and repetitive mode; users can also carry out cyclic positioning through terminal function (no. 55, enable digital positioning cycle)

6. Commissioning procedures for positioning of photoelectric switch

Photoelectric switch positioning is to realize positioning function based on closed-loop vector control.

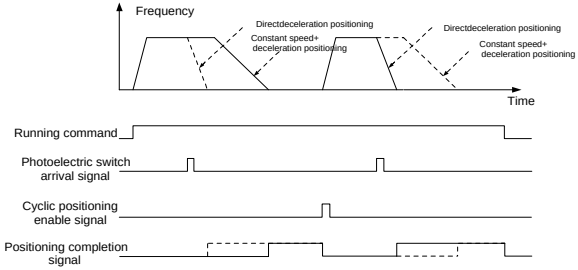

Step 1–4: These four steps are the same with the first four steps of the commissioning procedures for closed-loop vector control, which aim to fulfill the control requirements of closed-loop vector control.

Step 5: Set P21.00=0021 to enable photoelectric switch positioning, the photoelectric switch signal

can be connected to S8 terminal only, and set P05.08=43, meanwhile, set P21.17, P21.11 and P21.12 (set positioning displacement) based on actual needs; set P21.21 (deceleration time of positioning), however, when present running speed is too fast or the set positioning displacement is too small, the deceleration time of positioning will be invalid, and it will enter direct deceleration positioning mode.

Step 6: Cyclic positioning

After positioning is done, the motor will stay in current position. Users can set cyclic positioning through input terminal function selection (55: enable cyclic digital positioning) in P05 group; when the terminal receives cyclic positioning enable signal (pulse signal), the motor will continue running in the set speed as per the speed mode and re-enter positioning state after encountering photoelectric switch.

(7) Hold positioning

The position loop gain during positioning is P21.03; while the position loop gain in positioning-completion-hold state is P21.02. In order to keep sufficient position-hold force and ensure no system oscillation occurred, adjust P03.00, P03.01, P20.05, and P21.02.

5.5.19 Fault handling

The following provides fault handling information.

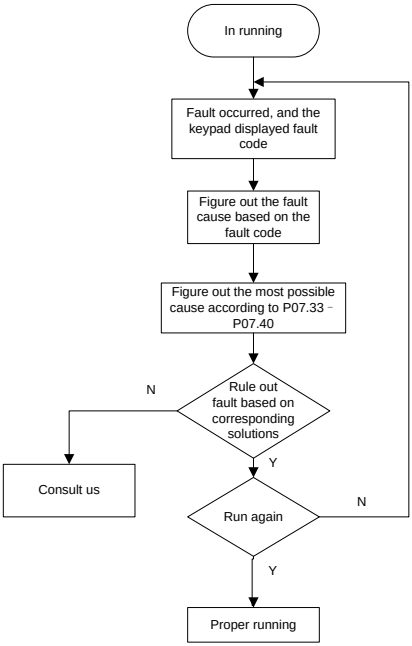

Related parameter list:

Function code	Name	Description	Default
P07.27	Present fault type	0: No fault	0
P07.28	Last fault type	1: Inverter unit U phase protection (OUt1)	0
P07.29	2nd-last fault type	2: Inverter unit V phase protection (OUt2)	0
P07.30	3rd-last fault type	3: Inverter unit W phase protection (OUt3)	0
P07.31	4th-last fault type	4: Overcurrent during acceleration (OC1)	0
P07.32	5th-last fault type	5: Overcurrent during deceleration (OC2) 6: Overcurrent during constant speed (OC3) 7: Overvoltage during acceleration (OV1) 8: Overvoltage during deceleration (OV2) 9: Overvoltage during constant speed (OV3) 10: Bus undervoltage fault (UV) 11: Motor overload (OL1) 12: VFD overload (OL2) 13: Phase loss on input side (SPI) 14: Phase loss on output side (SPO) 15: Rectifier module overheat (OH1) 16: Inverter module overheat (OH2) 17: External fault (EF) 18: Modbus/Modbus TCP communication fault (CE) 19: Current detection fault (ItE) 20: Motor autotuning fault (tE) 21: EEPROM operation fault (EEP) 22: PID feedback offline fault (PIDE) 23: Braking unit fault (bCE) 24: Running time reached (END) 25: Electronic overload (OL3) 26: Keypad communication error (PCE) 27: Parameter upload error (UPE) 28: Parameter download error (DNE) 29: PROFIBUS communication fault (E-DP) 30: Ethernet communication fault (E-NET) 31: CANopen communication fault (E-CAN) 32: To-ground short-circuit fault 1 (ETH1) 33: To-ground short-circuit fault 2 (ETH2) 34: Speed deviation fault (dEu)	0

Function code	Name	Description	Default
		35: Maladjustment fault (STo) 36: Underload fault (LL) 37: Encoder offline fault (ENC1o) 38: Encoder reversal fault (ENC1d) 39: Encoder Z pulse offline fault (ENC1Z) 40: Safe torque off (STO) 41: Channel H1 safety circuit exception (STL1) 42: Channel H2 safety circuit exception (STL2) 43: Channel H1 and H2 exception (STL3) 44: Safety code FLASH CRC fault (CrCE) 45: Programmable card customized fault 1 (P-E1) 46: Programmable card customized fault 2 (P-E2) 47: Programmable card customized fault 3 (P-E3) 48: Programmable card customized fault 4 (P-E4) 49: Programmable card customized fault 5 (P-E5) 50: Programmable card customized fault 6 (P-E6) 51: Programmable card customized fault 7 (P-E7) 52: Programmable card customized fault 8 (P-E8) 53: Programmable card customized fault 9 (P-E9) 54: Programmable card customized fault 10 (P-E10) 55: Duplicate card type(E-Err) 56: Encoder UVW loss fault (ENCUV) 57: PROFIBUS communication fault (E-PN) 58: CANopen communication fault (SECAN) 59: Motor over-temperature fault (OT) 60: Failure to identify the card at slot 1	

Function code	Name	Description	Default
		(F1-Er) 61: Failure to identify the card at slot 2 (F2-Er) 62: Failure to identify the card at slot 3 (F3-Er) 63: Communication timeout of the card at slot 1 (C1-Er) 64: Communication timeout of the card at slot 2 (C2-Er) 65: Communication timeout of the card at slot 3 (C3-Er) 66: EtherCAT communication fault (E-CAT) 67: Bacnet communication fault (E-BAC) 68: DeviceNet communication fault (E-DEV) 69: CAN slave fault in master/slave synchronization (S-Err) 70: EC PT100 detected overheating (OtE1) 71: EC PT1000 detected overheating (OtE2) 72: EtherNet/IP communication timeout (E-EIP) 73: No upgrade bootload (E-PAO) 74: AI1 disconnected (E-AI1) 75: AI2 disconnected (E-AI2) 76: AI3 disconnected (E-AI3)	
P07.33	Running frequency at present fault	0.00Hz–P00.03	0.00Hz
P07.34	Ramp reference frequency at present fault	0.00Hz–P00.03	0.00Hz
P07.35	Output current at present fault	0–1200V	0V
P07.36	Output current at present fault	0.0–6300.0A	0.0A
P07.37	Bus voltage at present fault	0.0–2000.0V	0.0V
P07.38	Max. temperature at present fault	-20.0–120.0°C	0.0°C

Function code	Name	Description	Default
P07.39	Input terminal status at present fault	0x0000–0xFFFF	0
P07.40	Output terminal status at present fault	0x0000–0xFFFF	0
P07.41	Running frequency at last fault	0.00Hz–P00.03	0.00Hz
P07.42	Ramp reference frequency at last fault	0.00Hz–P00.03	0.00Hz
P07.43	Output voltage at last fault	0–1200V	0V
P07.44	Output current at last fault	0.0–6300.0A	0.0A
P07.45	Bus voltage at last fault	0.0–2000.0V	0.0V
P07.46	Max. temperature at last fault	-20.0–120.0°C	0.0°C
P07.47	Input terminal status at last fault	0x0000–0xFFFF	0x0000
P07.48	Output terminal status at last fault	0x0000–0xFFFF	0x0000
P07.49	Running frequency at 2nd-last fault	0.00Hz–P00.03	0.00Hz
P07.50	Ramp reference frequency at 2nd-last fault	0.00Hz–P00.03	0.00Hz
P07.51	Output voltage at 2nd-last fault	0–1200V	0V
P07.52	Output current at 2nd-last fault	0.0–6300.0A	0.0A
P07.53	Bus voltage at 2nd-last fault	0.0–2000.0V	0.0V
P07.54	Max temperature at 2nd-last fault	-20.0–120.0°C	0.0°C
P07.55	Input terminal status at 2nd-last fault	0x0000–0xFFFF	0x0000
P07.56	Output terminal status at 2nd-last fault	0x0000–0xFFFF	0x0000

5.5.20 Tension control solutions

In many fields of industrial production, precise tension control is needed to maintain a constant output tension of the drive equipment, in order to improve the quality of the products. In the winding and unwinding of some industries such as paper processing, printing and dyeing, packing, wire and cable manufacturing, textile, fiber, optic cable, leather, metal foil material processing and so on, tension needs to keep constant.

The VFD controls the tension by regulating the motor output torque or speed. There are three modes to control the tension: speed mode, open-loop torque mode and closed-loop torque mode.

5.5.20.1 Typical tension control applications for winding/unwinding

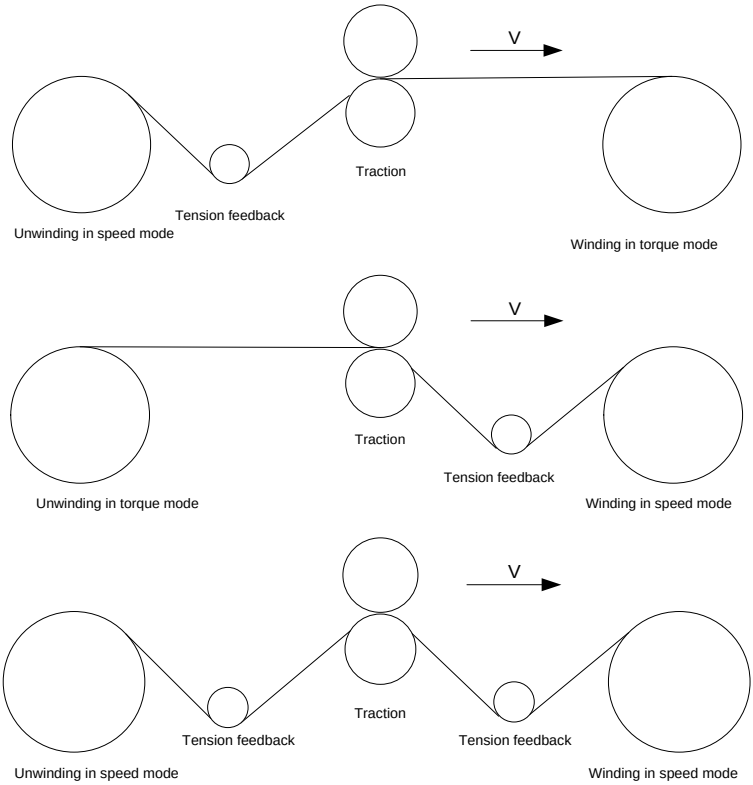

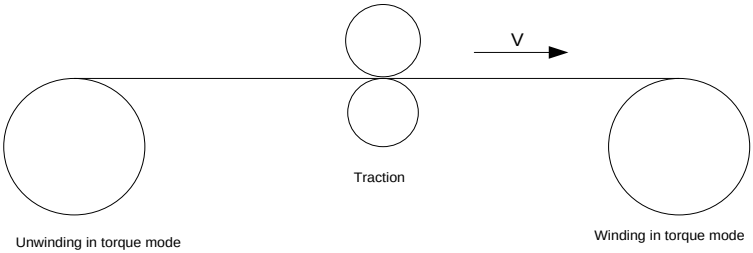

In some special situations, if the roll diameter can be counted through thickness, the following applications can be implemented:

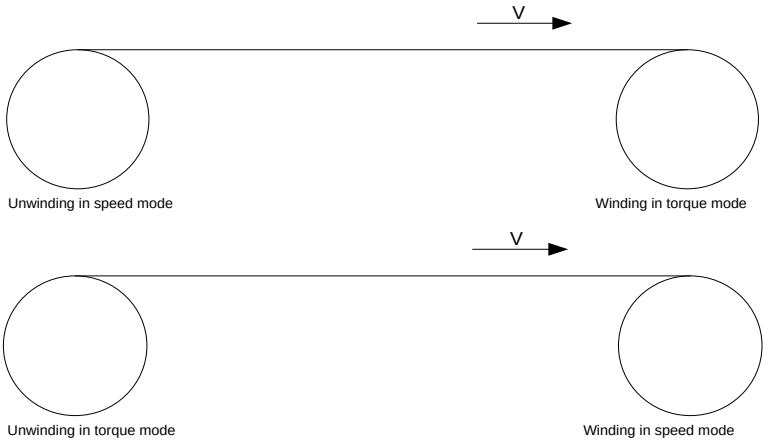

5.5.20.2 Speed control

The detection feedback signal is needed in the closed-loop adjustment. PID calculation is carried out according to the feedback signal for the motor speed regulation, linear speed and stable tension control. If the tension rocker or floating roller is used for feedback, changing the set value (PID reference) may change the actual tension, and at the same time, changing the mechanical configuration such as the tension rocker or floating roller weight can also change the tension.

The control principle is as follows.

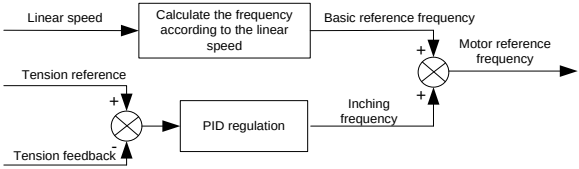

Related modules:

(1) Linear speed input module: It is important for the calculation of the basic setting frequency according to the linear speed and the calculation of roll diameter according to the linear speed.

(2) Real-time roll diameter calculation module: The calculation accuracy of roll diameter determines the control performance. The roll diameter can be calculated according to the VFD output frequency and the linear speed. In addition, it can also be calculated through the thickness or sensor. The linear speed is widely used for the calculation. If the set linear speed is used for the calculation, you you choose whether to enable the function of roll diameter change limiting.

(3) PID regulation module: There are two groups of PID parameters in P09. The linear speed synchronization and stable tension can be kept through PID regulation. PID parameters can be modified based on site commissioning. The two groups of PID parameters can be switched for PID regulation improvement.

(4) Material feeding interrupt detection and processing module: The function is valid when material feeding interrupt detection has been enabled.

(5) Pre-drive: This function is applied to automatic reel change. After the VFD is started if the pre-drive function terminal is valid, the roller runs at the set linear speed. If the terminal is invalid, the VFD will automatically switch to the corresponding control mode after a period of time.

5.5.20.3 Open-loop torque mode

Open loop means there is no tension feedback signal. In this mode, stable tension can be achieved by means of motor torque control. The rotation speed automatically changes with the linear speed of material. The control basis is as follows: For a reel control system, the relationship between the tension F of the roller with materials, present roll diameter D and output torque of the shaft is: T = F × D /2. If the output torque can be adjusted according to the variation of roll diameter, the tension can be controlled. In order to ensure the constant tension in the process of acceleration and deceleration, the internal friction compensation module and inertia compensation module have been built in the VFD to calculate the real time rotation inertia, and compensate the torque according to the actual speed change rate. The control principle is shown in the following figure.

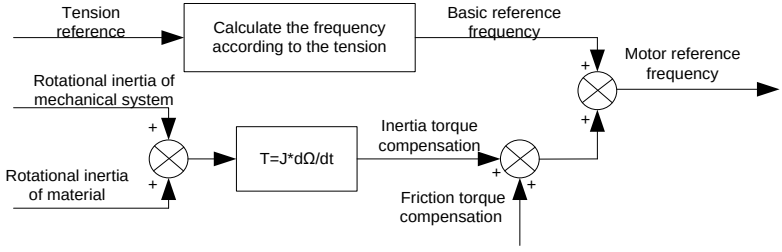

Relevant modes:

(1) Linear speed input module: It has two functions: calculating the synchronous frequency in torque

control according to the linear speed, and calculating the roll diameter according to the linear speed.

(2) Tension setting module: Used to set the tension adapting to the control system. It needs to be adjusted according to the actual situation. After confirmation, the value remains the same. In some scenarios where the forming effect after winding needs to be improved, the tension taper function can be used so that the tension decreases as the roll diamter increases.

(3) Real-time roll diameter calculation module: The calculation accuracy of roll diameter determines the control performance. The roll diameter can be calculated according to the VFD output frequency and the linear speed. In addition, it can also be calculated through the thickness or sensor. The linear speed is widely used for the calculation. If the set linear speed is used for the calculation, you you choose whether to enable the function of roll diameter change limiting.

(4) Torque compensation module: Torque compensation includes friction torque compensation and inertia torque compensation. Friction torque compensation is used to eliminate the impact of friction on tension, and it needs to be adjusted according to actual requirements. rRotation inertia includes inertial of mechanical systems and that of materials. In order to keep the tension stable in ACC/DEC, compensation torque is required. In some cases without strict tension control requirements, disabling rotation inertia torque compensation can also achieve the control.

(5) Material feeding interrupt detection and processing module: The function is valid when material feeding interrupt detection has been enabled.

(6) This function is applied to automatic reel change. After the VFD is started if the pre-drive function terminal is valid, the roller runs at the set linear speed. If the terminal is invalid, the VFD will automatically switch to the corresponding control mode after a period of time.

5.5.20.4 Closed-loop torque mode

Similar to the open-loop torque mode, the closed-loop torque mode has only the difference that tension detection sensors are installed on the winding/unwinding side. In addition to all the function modules supported in open-loop torque mode, this mode supports an additional tension feedback PID closed-loop regulation module. The control principle is shown in the following figure.

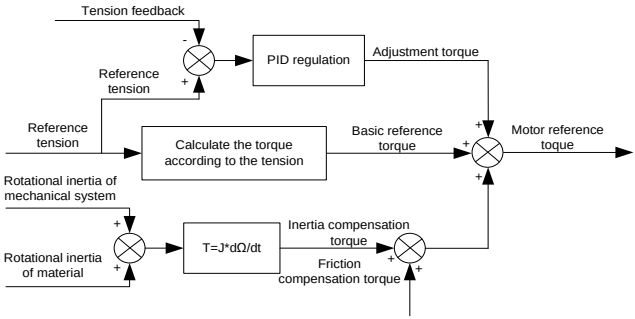

6 Function parameter list

6.1 What this chapter contains

This chapter lists all the function codes and corresponding description of each function code.

6.2 Function parameter list

The function parameters of the VFD are divided into groups by function. Among the function parameter groups, the P98 group is the analog input and output calibration group, while the P99 group contains the factory function parameters, which are user inaccessible. Each group includes several function codes (each function code identifies a function parameter). A three-level menu style is applied to function codes. For example, "P08.08" indicates the 8th function code in the P08 group.

The function group numbers correspond to the level-1 menus, the function codes correspond to the level-2 menus, and the function parameters correspond to the level-3 menus.

1. The content of the function code table is as follows:

Column 1 "Function code ": Code of the function group and parameter

Column 2 "Name": Full name of the function parameter

Column 3 "Description": Detailed description of the function parameter

Column 4 "Default": Initial value set in factory

Column 5 "Modify": Whether the function parameter can be modified, and conditions for the modification

"○" indicates that the value of the parameter can be modified when the VFD is in stopped or running state.

"◎" indicates that the value of the parameter cannot be modified when the VFD is in running state.

"●" indicates that the value of the parameter is detected and recorded, and cannot be modified.

(The VFD automatically checks and constrains the modification of parameters, which helps prevent incorrect modifications.)

2. The parameters adopt the decimal system (DEC). If the hexadecimal system is adopted, all bits are mutually independent on data during parameter editing, and the setting ranges at some bits can be hexadecimal (0–F).

3. "Default" indicates the factory setting of the function parameter. If the value of the parameter is detected or recorded, the value cannot be restored to the factory setting.

4. To better protect parameters, the VFD provides the password protection function. After a password is set (that is, P07.00 is set to a non-zero value), "0.0.0.0.0" is displayed when you press the PRG/ESC key to enter the function code editing interface. You need to enter the correct user password to enter the interface. For the factory parameters, you need to enter the correct factory

password to enter the interface. (You are not advised to modify the factory parameters. Incorrect parameter setting may cause operation exceptions or even damage to the VFD.) If password protection is not in locked state, you can change the password any time. You can set P07.00 to 0 to cancel the user password. When P07.00 is set to a non-zero value during power-on, parameters are prevented from being modified by using the user password function. When you modify function parameters through serial communication, the user password protection function is also applicable and compliant with the same rule.

P00—Basic functions

Function code	Name	Description	Default	Modify
P00.00	Speed control mode	0: Sensorless vector control (SVC) mode 0 1: Sensorless vector control (SVC) mode 1 2: Space voltage vector control mode 3: FVC **Note:** To select 0, 1, or 3 as the control mode, enable the VFD to perform motor parameter autotuning first.	2	◎
P00.01	Channel of running commands	0: Keypad 1: Terminal 2: Communication	0	○
P00.02	Communication mode of running commands	0: Modbus/Modbus TCP 1: PROFIBUS/CANopen/DeviceNet 2: Ethernet 3: EtherCAT/PROFINET/EtherNet IP 4: Programmable card 5: Wireless communication card 6: Reserved **Note:** The options 1, 2, 3, 4, and 5 are add-on functions and are available only when corresponding expansion cards are configured.	0	○
P00.03	Max. output frequency	Used to set the max. output frequency of the VFD. Pay attention to the function code because it is the foundation of the frequency setting and the speed of acceleration (ACC) and deceleration (DEC) Setting range: Max (P00.04, 10.00)–590.00Hz	50.00Hz	◎

Function code	Name	Description	Default	Modify
P00.04	Upper limit of running frequency	The upper limit of the running frequency is the upper limit of the output frequency of the VFD, which is lower than or equal to the max. output frequency. When the set frequency is higher than the upper limit of the running frequency, the upper limit of the running frequency is used for running. Setting range: P00.05–P00.03 (Max. output frequency)	50.00Hz	◎
P00.05	Lower limit of running frequency	The lower limit of the running frequency is the lower limit of the output frequency of the VFD, When the set frequency is lower than the lower limit of the running frequency, the lower limit of the running frequency is used for running. **Note:** Max. output frequency ≥ Upper limit of frequency ≥ Lower limit of frequency Setting range: 0.00Hz–P00.04 (Upper limit of running frequency)	0.00Hz	◎
P00.06	Setting channel of A frequency command	0: Keypad 1: AI1 2: AI2 3: AI3 4: High speed pulse HDIA 5: Simple PLC program 6: Multi-step speed running 7: PID control 8: Modbus/Modbus TCP communication 9: PROFIBUS/CANopen/DeviceNet communication 10: Ethernet communication 11: High speed pulse HDIB 12: Pulse train AB 13: EtherCAT/PROFINET/EtherNet IP communication 14: Programmable card 15: Reserved	0	○
P00.07	Setting channel of B frequency command		15	○

Function code	Name	Description	Default	Modify
P00.08	Reference object of B frequency command	0: Max. output frequency 1: A frequency command	0	○
P00.09	Combination mode of setting source	0: A 1: B 2: (A+B) 3: (A- B) 4: Max(A, B) 5: Min. (A, B)	0	○
P00.10	Frequency set through keypad	When A and B frequency commands select the keypad for setting, the value of the function code is the original setting one of the frequency data of the VFD. Setting range: 0.00 Hz–P00.03 (Max. output frequency)	50.00Hz	○
P00.11	ACC time 1	ACC time means the time needed if the VFD speeds up from 0Hz to the max. output frequency (P00.03). DEC time means the time needed if the VFD speeds down from the max. output frequency (P00.03) to 0Hz. The VFD has four groups of ACC/DEC time, which can be selected by P05. The factory default ACC/DEC time of the VFD is the first group. Setting range of P00.11 and P00.12: 0.0–3600.0s	Model depended	○
P00.12	DEC time 1		Model depended	○
P00.13	Running direction	0: Run at the default direction. 1: Run at the opposite direction. 2: Disable reverse running	0	○
P00.14	Carrier frequency	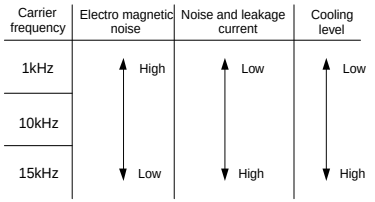 The relationship between models and carrier	Model depended	○

<table>
<tr><th>Function code</th><th>Name</th><th>Description</th><th>Default</th><th>Modify</th></tr>
<tr><td></td><td></td><td>frequencies is as follows:
<table>
<tr><th colspan="2">Model</th><th>Default carrier frequency</th></tr>
<tr><td rowspan="3">G type</td><td>1.5–11kW</td><td>8kHz</td></tr>
<tr><td>15–55kW</td><td>4kHz</td></tr>
<tr><td>Higher than 75kW</td><td>2kHz</td></tr>
<tr><td rowspan="2">P type</td><td>2.2–15kW</td><td>4kHz</td></tr>
<tr><td>Higher than 18.5kW</td><td>2kHz</td></tr>
</table>
Advantage of high carrier frequency: ideal current waveform, little current harmonic wave and motor noise.
Disadvantage of high carrier frequency: increasing the switch loss, increasing VFD temperature and the impact to the output capacity. The VFD needs to derate on high carrier frequency. At the same time, the leakage and electrical magnetic interference will increase.
On the contrary, an extremely-low a carrier frequency may cause unstable operation at low frequency, decrease the torque, or even lead to oscillation.
The carrier frequency has been properly set in the factory before the VFD is delivered. In general, you do not need to modify it.
When the frequency used exceeds the default carrier frequency, the VFD needs to derate by 10% for each increase of 1k carrier frequency.
Setting range: 1.0–15.0kHz</td><td></td><td></td></tr>
<tr><td>P00.15</td><td>Motor parameter autotuning</td><td>0: No operation
1: Complete parameter rotary autotuning
2: Complete parameter static autotuning
3: Partial parameter static autotuning
4: Complete parameter rotary autotuning 2 (AM)
5: Partial parameter static autotuning 2 (AM)</td><td>0</td><td>◎</td></tr>
</table>

Function code	Name	Description	Default	Modify
P00.16	AVR function selection	0: Invalid 1: Valid during the whole procedure The auto-adjusting function of the VFD can eliminate the impact on the output voltage of the VFD because of the bus voltage fluctuation.	1	○
P00.17	VFD type	0: G type 1: P type	0	◎
P00.18	Function parameter restore	0: No operation 1: Restore default values (excluding motor parameters) 2: Clear fault records 3: Lock keypad parameters 4: Reserved 5: Restore default values (for factory test mode) 6: Restore default values (including motor parameters) **Note:** After the selected operation is done, this parameter is automatically restored to 0. Restoring the default values may delete the user password. Exercise caution when using this function. The option 5 can be used only for factory testing.	0	◎

P01—Start and stop control

Function code	Name	Description	Default	Modify
P01.00	Start mode	0: Direct start 1: Start after DC braking 2: Start after speedtracking	0	◎
P01.01	Starting frequency of direct start	The parameter indicates the initial frequency during VFD start. See P01.02 (Starting frequency hold time) for detailed information. Setting range: 0.00–50.00Hz	0.50Hz	◎

Function code	Name	Description	Default	Modify
P01.02	Starting frequency hold time	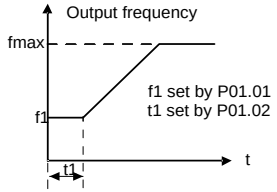 Setting a proper starting frequency can increase the torque during VFD start. During the hold time of the starting frequency, the output frequency of the VFD is the starting frequency. And then, the VFD runs from the starting frequency to the set frequency. If the set frequency is lower than the starting frequency, the VFD stops running and keeps in the standby state. The starting frequency is not limited in the lower limit frequency. Setting range: 0.0–50.0s	0.0s	◎
P01.03	Braking current before start	The VFD performs DC braking with the braking current before start and it speeds up after the DC braking time. If the set DC braking time is 0, DC braking is invalid. Stronger braking current indicates larger braking power. The DC braking current before start is a percentage of the VFD rated current. Setting range of P01.03: 0.0–100.0% Setting range of P01.04: 0.00–50.00s	0.0%	◎
P01.04	Braking time before start		0.00s	◎
P01.05	ACC and DEC mode	The parameter indicates the changing mode of the frequency during start and running. 0: Linear type. The output frequency increases or decreases linearly. 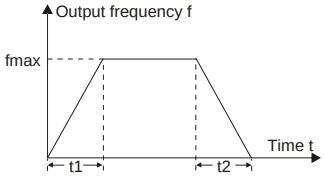 1: S curve. The output frequency increases or decreases according to the S curve.	0	◎

Function code	Name	Description	Default	Modify
		The S curve is generally applied to elevators, conveyors, and other application scenarios where smoother start or stop is required. 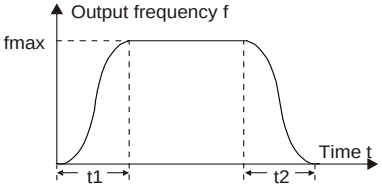 **Note:** If mode 1 is selected, set P01.06, P01.07, P01.27, and P01.28 accordingly.		
P01.06	Time of starting segment of ACC S curve	The curvature of S curve is determined by the ACC range and ACC/DEC time. 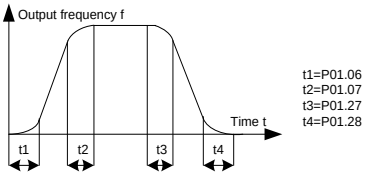 Setting range: 0.0–50.0s	0.1s	◎
P01.07	Time of ending segment of ACC S curve		0.1s	◎
P01.08	Stop mode	0: Decelerate to stop. After a stop command takes effect, the VFD lowers output frequency based on the DEC mode and the defined DEC time; after the frequency drops to the stop speed (P01.15), the VFD stops. 1: Coast to stop. After a stop command takes effect, the VFD stops output immediately; and the load coasts to stop according to mechanical inertia.	0	○
P01.09	Starting frequency of DC braking for stop	Starting frequency of DC braking for stop: During the deceleration to stop, the VFD starts DC braking for stop when running frequency reaches the starting frequency determined by P01.09.	0.00Hz	○
P01.10	Demagnetization time		0.00s	○
P01.11	DC braking current for stop	Wait time before DC braking: The VFD blocks the output before starting DC braking. After this wait time, DC braking is started so as to prevent overcurrent caused by DC braking at	0.0%	○
P01.12	DC braking time for stop		0.00s	○

Function code	Name	Description	Default	Modify
		high speed. DC braking current for stop: The value of P01.11 is the percentage of rated current of VFD. Stronger current indicates greater DC braking effect. DC braking time for stop: It indicates the hold time of DC braking. If the time is 0, DC braking is invalid, and the VFD decelerates to stop within the specified time. 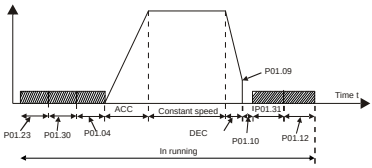 Setting range of P01.09: 0.00Hz–P00.03 (Max. output frequency) Setting range of P01.10: 0.00–30.00s Setting range of P01.11: 0.0–100.0% Setting range of P01.12: 0.00–50.00s		
P01.13	FWD/REV running deadzone time	This function code indicates the transition time specified in P01.14 during FWD/REV rotation switching. See the figure. 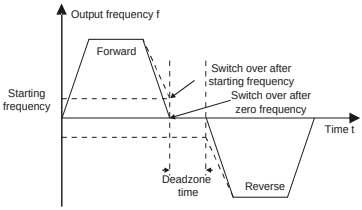 Setting range: 0.0–3600.0s	0.0s	○
P01.14	FWD/REV running switching mode	0: Switch at zero frequency 1: Switch at the starting frequency 2: Switch after the speed reaches the stop speed with a delay	1	◎
P01.15	Stop speed	0.00–100.00Hz	0.50Hz	◎
P01.16	Stop speed detection mode	0: Detect by the set speed (unique in V/F control mode) 1: Detect by the feedback speed	0	◎

Function code	Name	Description	Default	Modify
P01.17	Stop speed detection time	0.00–100.00s	0.50s	◎
P01.18	Terminal-based running command protection at power-on	When the channel of running commands is terminal control, the system detects the state of the running terminal during power-on. 0: The terminal running command is invalid at power-on. Even the running command is considered as valid during power-on, the VFD does not run and it keeps the protection state until the running command is canceled and enabled again. 1: The terminal running command is valid at power-on. If the running command is considered as valid during power-on, the VFD is started automatically after the initialization. **Note:** Exercise caution before using this function. Otherwise, serious result may follow.	0	○
P01.19	Action selected when running frequency less than frequency lower limit (valid when frequency lower limit greater than 0)	This parameter specifies the running status of VFD when the set frequency is below the lower limit. Setting range: 0x00–0x12 Ones place: Action selection 0: Run in lower limit of the frequency 1: Stop 2: Sleep Tens place: Stop mode 0: Coast to stop 1: Decelerate to stop The VFD stops as set in the tens place if the action selection is stop or sleep when the set frequency is below the lower limit. The VFD resumes the running state automatically when the set frequency is above the lower limit again and this situation lasts for the time set by P01.20.	0x00	◎
P01.20	Wake-up-from-sleep delay	The parameter determines the wake-up-from-sleep delay time. When the running frequency of the VFD is lower than	0.0s	○

Function code	Name	Description	Default	Modify
		the lower limit, the VFD becomes standby. When the set frequency exceeds the lower limit one again and it lasts for the time set by P01.20, the VFD runs automatically. 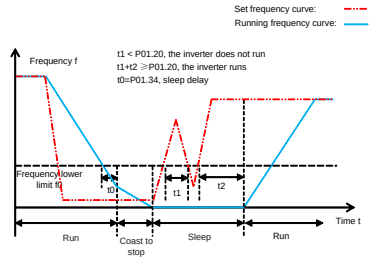 Setting range: 0.0–3600.0s (valid when P01.19=2)		
P01.21	Restart after power failure	The parameter indicates whether the VFD automatically runs after re-power on. 0: Disable 1: Enable. If the restart condition is met, the VFD will run automatically after waiting the time defined by P01.22.	0	○
P01.22	Wait time for restart after power-off	The parameter indicates the wait time before the automatic running of the VFD that is re-powered on. 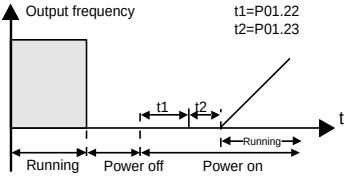 Setting range: 0.0–3600.0s (valid when P01.21=1)	1.0s	○
P01.23	Start delay	After a VFD running command is given, the VFD is in standby state and restarts with the delay defined by P01.23 to implement brake release. Setting range: 0.0–600.0s	0.0s	○
P01.24	Stop speed delay	0.0–600.0s	0.0s	○

Function code	Name	Description	Default	Modify
P01.25	Open-loop 0Hz output selection	0: Output without voltage 1: Output with voltage 2: Output with the DC braking current for stop	0	○
P01.26	DEC time for emergency stop	0.0–60.0s	2.0s	○
P01.27	Time of ending segment of DEC S curve Time of starting segment of DEC S curve	0.0–50.0s	0.1s	◎
P01.28	Time of ending segment of DEC S curve	0.0–50.0s	0.1s	◎
P01.29	Short-circuit braking current	When the VFD starts in direct start mode (P01.00=0), set P01.30 to a non-zero value to enter short-circuit braking. During stop, if the running frequency of VFD is lower than the starting frequency P01.09 of brake for stop, set P01.31 to a non-zero value to enter short-circuit braking for stop, and then carry out DC braking in the time set by P01.12. (Refer to the descriptions for P01.09–P01.12.) Setting range of P01.29: 0.0–150.0% (VFD) Setting range of P01.30: 0.00–50.00s Setting range of P01.31: 0.00–50.00s	0.0%	○
P01.30	Hold time of short-circuit braking for start		0.00s	○
P01.31	Hold time of short-circuit braking for stop		0.00s	○
P01.32	Pre-exciting time of jog	0–10.000s	0.300s	○
P01.33	Starting frequency of braking for jogging to stop	0.00Hz–P00.03	0.00Hz	○
P01.34	Delay to enter sleep	0.0–3600.0s	0.0s	○

P02—Parameters of motor 1

Function code	Name	Description	Default	Modify
P02.00	Type of motor 1	0: Asynchronous motor (AM) 1: Synchronous motor (SM)	0	◎
P02.01	Rated power of AM 1	0.1–3000.0kW	Model depended	◎
P02.02	Rated frequency of AM 1	0.01Hz–P00.03 (Max. output frequency)	50.00Hz	◎
P02.03	Rated speed of AM 1	1–60000rpm	Model depended	◎
P02.04	Rated voltage of AM 1	0–1200V	Model depended	◎
P02.05	Rated current of AM 1	0.8–6000.0A	Model depended	◎
P02.06	Stator resistance of AM 1	0.001–65.535Ω	Model depended	○
P02.07	Rotor resistance of AM 1	0.001–65.535Ω	Model depended	○
P02.08	Leakage inductance of AM 1	0.1–6553.5mH	Model depended	○
P02.09	Mutual inductance of AM 1	0.1–6553.5mH	Model depended	○
P02.10	No-load current of AM 1	0.1–6553.5A	Model depended	○
P02.11	Magnetic saturation coefficient 1 of iron core of AM 1	0.0–100.0%	80.0%	○
P02.12	Magnetic saturation coefficient 2 of iron core of AM 1	0.0–100.0%	68.0%	○
P02.13	Magnetic saturation coefficient 3 of iron core of AM 1	0.0–100.0%	57.0%	○
P02.14	Magnetic saturation coefficient 4 of iron core of AM 1	0.0–100.0%	40.0%	○
P02.15	Rated power of SM 1	0.1–3000.0kW	Model depended	◎

Function code	Name	Description	Default	Modify
P02.16	Rated frequency of SM 1	0.01Hz–P00.03 (Max. output frequency)	50.00Hz	◎
P02.17	Number of pole pairs of SM 1	1–128	2	◎
P02.18	Rated voltage of SM 1	0–1200V	Model depended	◎
P02.19	Rated current of SM 1	0.8–6000.0A	Model depended	◎
P02.20	Stator resistance of SM 1	0.001–65.535Ω	Model depended	○
P02.21	Direct-axis inductance of SM 1	0.01–655.35mH	Model depended	○
P02.22	Quadrature-axis inductance of SM 1	0.01–655.35mH	Model depended	○
P02.23	Counter-emf of SM 1	0–10000	300	○
P02.24	Initial pole position of SM 1	0x0000–0xFFFF	0x0000	●
P02.25	Identification current of SM 1	0%–50% (rated motor current)	10%	●
P02.26	Overload protection selection of motor 1	0: No protection 1: Common motor protection (with low-speed compensation). As the cooling effect of a common motor is degraded at low speed running, the corresponding electronic thermal protection value needs to be adjusted properly, the low compensation indicates lowering the overload protection threshold of the motor whose running frequency is lower than 30Hz. 2: Variable-frequency motor protection (without low speed compensation). Because the heat dissipation function for a variable-frequency motor is not impacted by the rotation speed, it is not necessary to adjust the protection value at low speed running.	2	◎

Function code	Name	Description	Default	Modify
P02.27	Overload protection coefficient of motor 1	Motor overload multiples M=Iout/(In*K) In is rated motor current, Iout is VFD output current, and K is motor overload protection coefficient. A smaller value of K indicates a bigger value of M. When M=116%, protection is performed after motor overload lasts for 1 hour; when M=180%, protection is performed after motor overload lasts for 5 minutes; when M=200%, protection is performed after motor overload lasts for 60 seconds; and when M≥400%, protection is performed immediately. 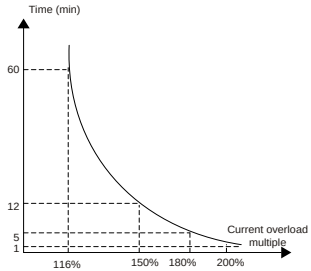 Setting range: 20.0%–150.0%	100.0%	○
P02.28	Power display calibration coefficient of motor 1	The function code can be used to adjust the power display value of motor 1. However, it does not affect the control performance of the VFD. Setting range: 0.00–3.00	1.00	○
P02.29	Parameter display selection of motor 1	0: Display by motor type. In this mode, only parameters related to the present motor type are displayed. 1: Display all. In this mode, all the motor parameters are displayed.	0	○
P02.30	System inertia of motor 1	0.000–30.000kgm^2	0.000kgm^2	○
P02.31–P02.32	Reserved			

P03—Vector control of motor 1

Function code	Name	Description	Default	Modify
P03.00	Speed-loop proportional gain 1	The parameters P03.00–P03.05 are applicable only to vector control mode. Below the switching frequency 1 (P03.02), the speed-loop PI parameters are: P03.00 and P03.01. Above the switching frequency 2 (P03.05), the speed-loop PI parameters are: P03.03 and P03.04. PI parameters are obtained according to the linear change of two groups of parameters. See the following figure: 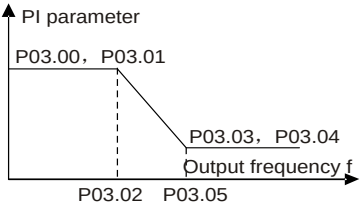 The speed loop dynamic response characteristics of vector control can be adjusted by setting the proportional coefficient and integral time of speed regulator. Increasing proportional gain or reducing integral time can accelerate dynamic response of speed loop; however, if the proportional gain is too large or integral time is too small, system oscillation and overshoot may occur; if proportional gain is too small, stable oscillation or speed offset may occur. PI parameters have a close relationship with the inertia of the system. Adjust PI parameters depending on different loads to meet various demands. Setting range of P03.00: 0.0–200.0 Setting range of P03.01: 0.000–10.000s Setting range of P03.02: 0.00Hz–P03.05 Setting range of P03.03: 0.0–200.0 Setting range of P03.04: 0.000–10.000s	20.0	○
P03.01	Speed-loop integral time 1		0.200s	○
P03.02	Low-point frequency for switching		5.00Hz	○
P03.03	Speed-loop proportional gain 2		20.0	○
P03.04	Speed-loop integral time 2		0.200s	○
P03.05	High-point frequency for switching		10.00Hz	○

Function code	Name	Description	Default	Modify
		Setting range of P03.05: P03.02–P00.03 (Max. output frequency)		
P03.06	Speed-loop output filter	0–8 (corresponding to 0–2^8/10ms)	0	○
P03.07	Electromotive slip compensation coefficient of vector control	Slip compensation coefficient is used to adjust the slip frequency of the vector control and improve the speed control accuracy of the system. Adjusting the parameter properly can control the speed steady-state error. Setting range: 50–200%	100%	○
P03.08	Power-generation slip compensation coefficient of vector control		100%	○
P03.09	Current-loop proportional coefficient P	**Note:** ● The two parameters are used to adjust PI parameters of current loop; it affects dynamic response speed and control precision of the system directly. The default value needs no adjustment under common conditions. ● Applicable to SVC mode 0 (P00.00=0), SVC mode 1 (P00.00=1), and FVC mode (P00.00=3). Setting range: 0–65535	1000	○
P03.10	Current-loop integral coefficient I		1000	○
P03.11	Torque setting method	0: Keypad (P03.12) 1: Keypad (P03.12) 2: AI1 3: AI2 4: AI3 5: Pulse frequency HDIA 6: Multi-step torque 7: Modbus/Modbus TCP communication 8: PROFIBUS/CANopen/DeviceNet communication 9: Ethernet communication 10: Pulse frequency HDIB 11: EtherCAT/PROFINET/EtherNet IP communication 12: Programmable card	0	○

Function code	Name	Description	Default	Modify
		Note: For these settings, 100% corresponds to the motor rated current.		
P03.12	Torque set through keypad	-300.0%–300.0% (of the motor rated current)	20.0%	○
P03.13	Torque reference filter time	0.000–10.000s	0.010s	○
P03.14	Setting source of forward rotation upper-limit frequency in torque control	0: Keypad (P03.16) 1: AI1 2: AI2 3: AI3 4: Pulse frequency HDIA 5: Multi-step setting 6: Modbus/Modbus TCP communication 7: PROFIBUS/CANopen/DeviceNet communication 8: Ethernet communication 9: Pulse frequency HDIB 10: EtherCAT/PROFINET/EtherNet IP communication 11: Programmable card 12: Reserved **Note:** For these settings, 100% corresponds to the max. frequency.	0	○
P03.15	Setting source of reverse rotation upper-limit frequency in torque control	0: Keypad (P03.17) 1: AI1 2: AI2 3: AI3 4: Pulse frequency HDIA 5: Multi-step setting 6: Modbus/Modbus TCP communication 7: PROFIBUS/CANopen/DeviceNet communication 8: Ethernet communication 9: Pulse frequency HDIB 10: EtherCAT/PROFINET/EtherNet IP communication 11: Programmable card 12: Reserved	0	○

Function code	Name	Description	Default	Modify
		Note: For these settings, 100% corresponds to the max. frequency.		
P03.16	Forward rotation upper-limit frequency set through keypad in torque control	Used to set the frequency upper limits. 100% corresponds to the max. frequency. P03.16 sets the value when P03.14=1; P03.17 sets the value when P03.15=1. Setting range: 0.00Hz–P00.03 (Max. output frequency)	50.00Hz	○
P03.17	Reverse rotation upper-limit frequency set through keypad in torque control		50.00Hz	○
P03.18	Setting source of electromotive torque upper limit	0: Keypad (P03.20) 1: AI1 2: AI2 3: AI3 4: Pulse frequency HDIA 5: Modbus/Modbus TCP communication 6: PROFIBUS/CANopen/DeviceNet communication 7: Ethernet communication 8: Pulse frequency HDIB 9: EtherCAT/PROFINET/EtherNet IP communication 10: Programmable card 11: Reserved **Note:** For these settings, 100% corresponds to the motor rated current.	0	○
P03.19	Setting source of braking torque upper limit	0: Keypad (P03.21) 1: AI1 2: AI2 3: AI3 4: Pulse frequency HDIA 5: Modbus/Modbus TCP communication 6: PROFIBUS/CANopen/DeviceNet communication 7: Ethernet communication 8: Pulse frequency HDIB	0	○

Function code	Name	Description	Default	Modify
		9: EtherCAT/PROFINET/EtherNet IP communication 10: Programmable card 11: Reserved **Note:** For these settings, 100% corresponds to the motor rated current.		
P03.20	Electromotive torque upper limit set through keypad	Used to set torque limits. Setting range: 0.0–300.0% (of the motor rated current)	180.0%	○
P03.21	Braking torque upper limit set through keypad		180.0%	○
P03.22	Weakening coefficient in constant power zone	Used when the AM is in flux-weakening control.	0.3	○
P03.23	Lowest weakening point in constant power zone	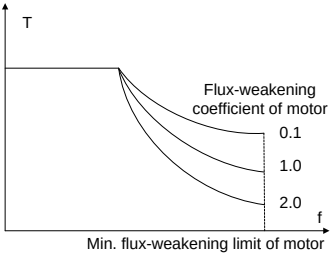 The function codes P03.22 and P03.23 are valid at constant power. The motor enters the flux-weakening state when the motor runs above the rated speed. Change the flux-weakening curvature by modifying the flux-weakening control coefficient. The larger the coefficient, the steeper the curve, the smaller the coefficient, the smoother the curve. Setting range of P03.22: 0.1–2.0 Setting range of P03.23: 10%–100%	20%	○
P03.24	Max. voltage limit	P03.24 sets the max. output voltage of the VFD, which is the percentage of motor rated voltage. Set the value according to onsite conditions. Setting range: 0.0–120.0%	100.0%	○

Function code	Name	Description	Default	Modify
P03.25	Pre-exciting time	Pre-exciting is performed for the motor when the VFD starts up. A magnetic field is built up inside the motor to improve the torque performance during the start process. Setting range: 0.000–10.000s	0.300s	○
P03.26	Flux-weakening proportional gain	0–8000	1000	○
P03.27	Speed display selection in vector control	0: Display the actual value 1: Display the set value	0	○
P03.28	Static friction compensation coefficient	0.0–100.0%	0.0%	○
P03.29	Corresponding frequency point of static friction	0.50Hz–P03.31	1.00Hz	○
P03.30	High speed friction compensation coefficient	0.0–100.0%	0.0%	○
P03.31	Corresponding frequency of high speed friction torque	P03.29–400.00Hz	50.00Hz	○
P03.32	Enabling torque control	0: Disable 1: Enable	0	◎
P03.33	Flux-weakening integral gain	0–8000	1200	○
P03.34	Flux-weakening control mode	0x000–0x112 Ones place: Control mode 0: Mode 0 1: Mode 1 2: Mode 2 Tens place: Compensation of inductance saturation coefficient 0: Enable 1: Disable Hundreds place: Reserved	0x000	●

Function code	Name	Description	Default	Modify
		0: Reserved 1: Reserved		
P03.35	Control optimization setting	0x0000–0x1111 Ones place: Torque command selection 0: Torque reference 1: Torque current reference Tens place: Reserved 0: Reserved 1: Reserved Hundreds place: indicates whether to enable speed-loop integral separation 0: Disable 1: Enable Thousands place: Reserved 0: Reserved 1: Reserved Range: 0x0000–0x1111	0x0000	○
P03.36	Speed-loop differential gain	0.00–10.00s	0.00s	○
P03.37	High-frequency current-loop proportional coefficient	Under the FVC mode (P00.00=3), when the frequency is lower than the current-loop high-frequency switching threshold (P03.39), the current-loop PI parameters are P03.09 and P03.10; and when the frequency is higher than the current-loop high-frequency switching threshold (P03.39), the current-loop PI parameters are P03.37 and P03.38. Setting range of P03.37: 0–65535 Setting range of P03.38: 0–65535 Setting range of P03.39: 0.0–100.0% (of the maximum frequency)	1000	○
P03.38	High-frequency current-loop integral coefficient		1000	○
P03.39	Current-loop high-frequency switching threshold		100.0%	○
P03.40	Enabling inertia compensation	0: Disable 1: Enable	0	○
P03.41	Upper limit of inertia compensation torque	The max. inertia compensation torque is limited to prevent inertia compensation torque from being too large. Setting range: 0.0–150.0% (of the motor rated torque)	10.0%	○

Function code	Name	Description	Default	Modify
P03.42	Inertia compensation filter times	Filter times of inertia compensation torque, used to smooth inertia compensation torque. Setting range: 0–10	7	○
P03.43	Inertia identification torque value	Due to friction force, it is required to set certain identification torque for the inertia identification to be performed properly. Setting range: 0.0–100.0% (of the motor rated torque)	10.0%	○
P03.44	Enabling inertia identification	0: No operation 1: Enable	0	◎
P03.45	Current loop proportional coefficient after autotuning	Automatic update will be performed after motor parameter autotuning. In the closed-loop vector control mode for synchronous motors, you can set the value of this function code to P03.09. Range: 0–65535 **Note:** Set the value to 0 if motor parameter autotuning is not performed.	0	●
P03.46	Current integral proportional coefficient after autotuning	Automatic update will be performed after motor parameter autotuning. In the closed-loop vector control mode for synchronous motors, you can set the value of this function code to P03.10. Range: 0–65535 **Note:** Set the value to 0 if motor parameter autotuning is not performed.	0	●

P04—V/F control

Function code	Name	Description	Default	Modify
P04.00	V/F curve setting of motor 1	This group of function code defines the V/F curve of motor 1 to meet the needs of different loads. 0: Straight-line V/F curve, applicable to constant torque loads 1: Multi-point V/F curve 2: Torque-down V/F curve (power of 1.3) 3: Torque-down V/F curve (power of 1.7)	0	◎

Function code	Name	Description	Default	Modify
		4: Torque-down V/F curve (power of 2.0) Curves 2 – 4 are applicable to the torque loads such as fans and water pumps. You can adjust according to the characteristics of the loads to achieve best performance. 5: Customized V/F (V/F separation); in this mode, V can be separated from F and F can be adjusted through the frequency setting channel set by P00.06 or the voltage setting channel set by P04.27 to change the characteristics of the curve. **Note:** In the following figure, V_b is the motor rated voltage and f_b is the motor rated frequency. 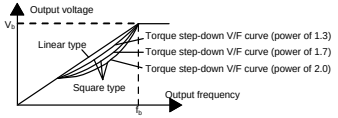		
P04.01	Torque boost of motor 1	In order to compensate for low-frequency torque characteristics, you can make some boost compensation for the output voltage. P04.01 is relative to the maximum output voltage V_b. P04.02 defines the percentage of cut-off frequency of manual torque boost to the rated motor frequency f_b. Torque boost can improve the low-frequency torque characteristics of V/F. You need to select torque boost based on the load. For example, larger load requires larger torque boost, however, if the torque boost is too large, the motor will run at over-excitation, which may cause increased output current and motor overheating, thus decreasing the efficiency. When torque boost is set to 0.0%, the VFD	0.0%	○
P04.02	Torque boost cut-off of motor 1		20.0%	○

<table>
<tr><th>Function code</th><th>Name</th><th>Description</th><th>Default</th><th>Modify</th></tr>
<tr><td></td><td></td><td>uses automatic torque boost.
Torque boost cut-off threshold: Below this frequency threshold, torque boost is valid; exceeding this threshold will invalidate torque boost.
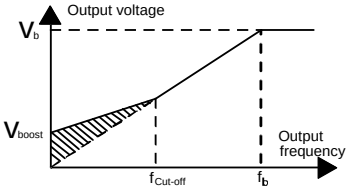

Setting range of P04.01: 0.0%: (automatic); 0.1%–10.0%
Setting range of P04.02: 0.0%–50.0%</td><td></td><td></td></tr>
<tr><td>P04.03</td><td>V/F frequency point 1 of motor 1</td><td rowspan="6">When P04.00=1 (multi-dot V/F curve), you can set the V/F curve through P04.03–P04.08.
The V/F curve is generally set according to the load characteristics of the motor.
Note: V1 < V2 < V3, f1 < f2 < f3. Too high voltage for low frequency will cause motor overheat or damage and cause VFD overcurrent stall or overcurrent protection.
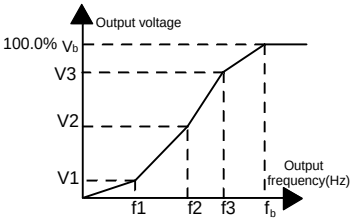

Setting range of P04.03: 0.00Hz–P04.05
Setting range of P04.04: 0.0%–110.0% (of the rated voltage of motor 1)
Setting range of P04.05: P04.03–P04.07
Setting range of P04.06: 0.0%–110.0% (of the rated voltage of motor 1)</td><td>0.00Hz</td><td>○</td></tr>
<tr><td>P04.04</td><td>V/F voltage point 1 of motor 1</td><td>0.0%</td><td>○</td></tr>
<tr><td>P04.05</td><td>V/F frequency point 2 of motor 1</td><td>0.00Hz</td><td>○</td></tr>
<tr><td>P04.06</td><td>V/F voltage point 2 of motor 1</td><td>0.0%</td><td>○</td></tr>
<tr><td>P04.07</td><td>V/F frequency point 3 of motor 1</td><td>0.00Hz</td><td>○</td></tr>
<tr><td>P04.08</td><td>V/F voltage point 3 of motor 1</td><td>0.0%</td><td>○</td></tr>
</table>

Function code	Name	Description	Default	Modify
		Setting range of P04.07: P04.05–P02.02 (rated frequency of AM 1) or P04.05–P02.16 (rated frequency of SM 1) Setting range of P04.08: 0.0%–110.0% (of the motor rated voltage of motor 1)		
P04.09	V/F slip compensation gain of motor 1	Used to compensate for the motor rotating speed change caused by load change in the space voltage vector mode, and thus improve the rigidity of the mechanical characteristics of the motor. You need to calculate the rated slip frequency of the motor as follows: △f=fb-n*p/60 Of which, f_b is the rated frequency of motor 1, corresponding to function code P02.02. n is the rated rotating speed of motor 1, corresponding to function code P02.03. p is the number of pole pairs of the motor. 100.0% corresponds to the rated slip frequency △f of motor 1. Setting range: 0.0–200.0%	100.0%	○
P04.10	Low-frequency oscillation control factor of motor 1	In space voltage vector control mode, the motor, especially the large-power motor, may experience current oscillation at certain frequencies, which may cause unstable motor running, or even VFD overcurrent. You can adjust the two function codes properly to eliminate such phenomenon. Setting range of P04.10: 0–100 Setting range of P04.11: 0–100 Setting range of P04.12: 0.00Hz–P00.03 (Max. output frequency)	10	○
P04.11	High-frequency oscillation control factor of motor 1		10	○
P04.12	Oscillation control threshold of motor 1		30.00Hz	○
P04.13	V/F curve setting of motor 2	This group of function code defines the V/F curve of motor 2 to meet the needs of different loads. 0: Straight-line V/F curve 1: Multi-point V/F curve 2: Torque-down V/F curve (power of 1.3) 3: Torque-down V/F curve (power of 1.7)	0	◎

Function code	Name	Description	Default	Modify
		4: Torque-down V/F curve (power of 2.0) 5: Customized V/F curve (V/F separation) Note: Refer to the description for P04.00.		
P04.14	Torque boost of motor 2	Note: Refer to the descriptions for P04.01 and P04.02.	0.0%	○
P04.15	Torque boost cut-off of motor 2	Setting range of P04.14: 0.0%: (automatic); 0.1%–10.0% Setting range of P04.15: 0.0%–50.0% (of the rated frequency of motor 2)	20.0%	○
P04.16	V/F frequency point 1 of motor 2	Note: Refer to the descriptions for P04.03–P04.08.	0.00Hz	○
P04.17	V/F voltage point 1 of motor 2	Setting range of P04.16: 0.00Hz–P04.18 Setting range of P04.17: 0.0%–110.0% (of the rated voltage of motor 2)	0.0%	○
P04.18	V/F frequency point 2 of motor 2	Setting range of P04.18: P04.16– P04.20	0.00Hz	○
P04.19	V/F voltage point 2 of motor 2	Setting range of P04.19: 0.0%–110.0% (of the rated voltage of motor 2)	0.0%	○
P04.20	V/F frequency point 3 of motor 2	Setting range of P04.20: P04.18–P12.02 (rated frequency of AM 2) or P04.18–P12.16 (rated frequency of SM 2)	0.00Hz	○
P04.21	V/F voltage point 3 of motor 2	Setting range of P04.21: 0.0%–110.0% (of the rated voltage of motor 2)	0.0%	○
P04.22	V/F slip compensation gain of motor 2	Used to compensate for the motor rotating speed change caused by load change in the space voltage vector mode, and thus improve the rigidity of the mechanical characteristics of the motor. You need to calculate the rated slip frequency of the motor as follows: $\triangle f=f_b-n*p/60$ Of which, f_b is the rated frequency of the motor, corresponding to function code P12.02. n is the rated rotating speed of the motor, corresponding to function code P12.03. p is the number of pole pairs of the motor. 100.0% corresponds to the rated slip frequency △f of motor 2. Setting range: 0.0–200.0%	0.0%	○

Function code	Name	Description	Default	Modify
P04.23	Low-frequency oscillation control factor of motor 2	In space voltage vector control mode, the motor, especially the large-power motor, may experience current oscillation at certain frequencies, which may cause unstable motor running, or even VFD overcurrent. You can adjust the two function codes properly to eliminate such phenomenon. Setting range of P04.23: 0–100 Setting range of P04.24: 0–100 Setting range of P04.25: 0.00Hz–P00.03 (Max. output frequency)	10	○
P04.24	High-frequency oscillation control factor of motor 2		10	○
P04.25	Oscillation control threshold of motor 2		30.00Hz	○
P04.26	Energy-saving run	0: Disable 1: Automatic energy-saving run In light-load state, the motor can adjust the output voltage automatically to achieve energy saving.	0	◎
P04.27	Voltage setting channel	0: Keypad (The output voltage is determined by P04.28) 1: AI1 2: AI2 3: AI3 4: HDIA 5: Multi-step speed running (The setting is determined by group P10.) 6: PID 7: Modbus/Modbus TCP communication 8: PROFIBUS/CANopen/DeviceNet communication 9: Ethernet communication 10: HDIB 11: EtherCAT/PROFINET/Ethernet IP communication 12: Programmable card 13: Reserved	0	○
P04.28	Voltage set through keypad	The function code is the voltage digital setting when "keypad" is selected as the voltage setting channel. Setting range: 0.0%–100.0%	100.0%	○

Function code	Name	Description	Default	Modify
P04.29	Voltage increase time	Voltage increase time means the time needed for the VFD to accelerate from min. output voltage to the max. output frequency. Voltage decrease time means the time needed for the VFD to decelerate from the max. output frequency to min. output voltage. Setting range: 0.0–3600.0s	5.0s	○
P04.30	Voltage decrease time		5.0s	○
P04.31	Max. output voltage	Used to set the upper and lower limits of output voltage. 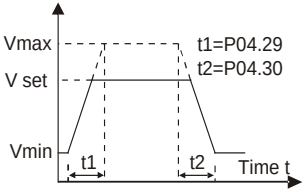 Setting range of P04.31: P04.32–100.0% (of the motor rated voltage) Setting range of P04.32: 0.0%–P04.31	100.0%	◎
P04.32	Min. output voltage		0.0%	◎
P04.33	Weakening coefficient in constant power zone	1.00–1.30	1.00	○
P04.34	Pull-in current 1 in SM V/F control	When the SM V/F control mode is enabled, the function code is used to set the reactive current of the motor when the output frequency is lower than the frequency specified by P04.36. Setting range: -100.0%–100.0% (of the motor rated current)	20.0%	○
P04.35	Pull-in current 2 in SM V/F control	When the SM V/F control mode is enabled, the function code is used to set the reactive current of the motor when the output frequency is higher than the frequency specified by P04.36 Setting range: -100.0%–100.0% (of the motor rated current)	10.0%	○

Function code	Name	Description	Default	Modify
P04.36	Frequency threshold for pull-in current switching in SM V/F control	When the SM V/F control mode is enabled, the function code is used to set the frequency threshold for the switching between pull-in current 1 and pull-in current 2. Setting range: 0%–200.0% (of the motor rated frequency)	20.0%	○
P04.37	Reactive current closed-loop proportional coefficient in SM V/F control	When the SM V/F control mode is enabled, the function code is used to set the proportional coefficient of reactive current closed-loop control. Setting range: 0–3000	50	○
P04.38	Reactive current closed-loop integral time in SM V/F control	When the SM V/F control mode is enabled, the function code is used to set the integral coefficient of reactive current closed-loop control. Setting range: 0–3000	30	○
P04.39	Reactive current closed-loop output limit in SM V/F control	When the SM V/F control mode is enabled, the function code is used to set the output limit of the reactive current closed-loop control. A greater value indicates a higher reactive closed-loop compensation voltage and higher output power of the motor. In general, you do not need to modify the function code. Setting range: 0–16000	8000	○
P04.40	Enabling IF mode for AM 1	0: Disable 1: Enable	0	◎
P04.41	Current setting in IF mode for AM 1	When IF control is adopted for AM 1, the function code is used to set the output current. The value is a percentage in relative to the rated current of the motor. Setting range: 0.0–200.0%	120.0%	○
P04.42	Proportional coefficient in IF mode for AM 1	When IF control is adopted for AM 1, the function code is used to set the proportional coefficient of the output current closed-loop control. Setting range: 0–5000	350	○

Function code	Name	Description	Default	Modify
P04.43	Integral coefficient in IF mode for AM 1	When IF control is adopted for AM 1, the function code is used to set the integral coefficient of the output current closed-loop control. Setting range: 0–5000	150	○
P04.44	Frequency threshold for switching off IF mode for AM 1	0.00Hz–P04.50	10.00Hz	○
P04.45	Enabling IF mode for AM 2	0: Disable 1: Enable	0	◎
P04.46	Current setting in IF mode for AM 2	When IF control is adopted for AM 2, the function code is used to set the output current. The value is a percentage in relative to the rated current of the motor. Setting range: 0.0–200.0%	120.0%	○
P04.47	Proportional coefficient in IF mode for AM 2	When IF control is adopted for AM 2, the function code is used to set the proportional coefficient of output current closed-loop control. Setting range: 0–5000	350	○
P04.48	Integral coefficient in IF mode for AM 2	When IF control is adopted for AM 2, the function code is used to set the integral coefficient of output current closed-loop control. Setting range: 0–5000	150	○
P04.49	Frequency threshold for switching off IF mode for AM 2	0.00Hz–P04.51	10.00Hz	○
P04.50	End frequency point for switching off IF mode for AM 1	P04.44–P00.03	25.00Hz	○
P04.51	End frequency point for switching off IF mode for AM 2	P04.49–P00.03	25.00Hz	○

P05—Input terminals

Function code	Name	Description	Default	Modify
P05.00	HDI input type	0x00–0x11 Ones place: HDIA input type 0: HDIA is high-speed pulse input 1: HDIA is digital input Tens place: HDIB input type 0: HDIB is high-speed pulse input 1: HDIB is digital input	0x00	◎
P05.01	Function of S1 terminal	0: No function 1: Forward running 2: Reverse running 3: 3-wire control/Sin 4: Forward jogging 5: Reverse jogging 6: Coast to stop 7: Fault reset 8: Running pause 9: External fault input 10: Frequency increase (UP) 11: Frequency decrease (DOWN) 12: Clear frequency increase/decrease setting 13: Switchover between setup A and setup B 14: Switchover between combination setup and setup A 15: Switchover between combination setup and setup B 16: Multi-step speed terminal 1 17: Multi-step speed terminal 2 18: Multi-step speed terminal 3 19: Multi-step speed terminal 4 20: Multi-step speed pause 21: Acceleration/deceleration time selection 1 22: Acceleration/deceleration time selection 2 23: Simple PLC stop reset 24: Simple PLC pause 25: PID control pause 26: Wobbling frequency pause	1	◎
P05.02	Function of S2 terminal		4	◎
P05.03	Function of S3 terminal		7	◎
P05.04	Function of S4 terminal		0	◎
P05.05	Function of HDIA terminal		0	◎
P05.06	Function of HDIB terminal		0	◎

Function code	Name	Description	Default	Modify
		27: Wobbling frequency reset 28: Counter reset 29: Switchover between speed control and torque control 30: Acceleration/deceleration disabled 31: Counter trigger 32: Reserved 33: Clear frequency increase/decrease setting temporarily 34: DC brake 35: Switch from motor 1 to motor 2 36: Command switches to keypad 37: Command switches to terminal 38: Command switches to communication 39: Pre-exciting command 40: Zero out power consumption quantity 41: Maintain power consumption quantity 42: Switching the upper torque limit setting mode to keypad 43: Position reference point input (valid only for S2, S3 and S4) 44: Spindle orientation disabled 45: Spindle zeroing/local positioning zeroing 46: Spindle zero position selection 1 47: Spindle zero position selection 2 48: Spindle scale division selection 1 49: Spindle scale division selection 2 50: Spindle scale division selection 3 51: Terminal for switching between position control and speed control 52: Pulse input disabled 53: Clear position deviation cleared 54: Switch over position proportional gain 55: Enable cyclic positioning of digital position positioning 56: Emergency stop 57: Motor over-temperature fault input 58: Enable rigid tapping		

Function code	Name	Description	Default	Modify
		59: Switch to V/F control 60: Switch to FVC control 61: PID polarity switchover 62: Reserved 63: Enable servo 64: Limit of forward run 65: Limit of reverse run 66: Zero out encoder counting 67: Pulse increase 68: Enable pulse superimposition 69: Pulse decrease 70: Electronic gear selection 71: Switch to master 72: Switch to slave 73: Reset the roll diameter 74: Switch winding/unwinding 75: Pre-drive 76: Disable roll diameter calculation 77: Clear alarm display 78: Manual braking 79: Trigger forced feeding interrupt 80: Initial roll diameter 1 81: Initial roll diameter 2 82: Trigger fire mode control 83: Switch tension PID parameters 84–95: Reserved		
P05.07	Reserved			
P05.08	Input terminal polarity	Used to set the polarity of input terminals. When a bit is 0, the input terminal is positive; when a bit is 1, the input terminal is negative. 0x00–0x3F	0x00	○
P05.09	Digital input filter time	Used to set the filter time for S1–S4, HDIA, and HDIB. In strong interference cases, increase the value to avoid maloperation. 0.000–1.000s	0.010s	○
P05.10	Virtual terminal setting	0x00–0x3F (0: disable, 1: enable) BIT0: S1 virtual terminal BIT1: S2 virtual terminal	0x00	◎

<table>
<tr><th>Function code</th><th>Name</th><th>Description</th><th>Default</th><th>Modify</th></tr>
<tr><td></td><td></td><td>BIT2: S3 virtual terminal
BIT3: S4 virtual terminal
BIT4: HDIA virtual terminal
BIT5: HDIB virtual terminal</td><td></td><td></td></tr>
<tr><td>P05.11</td><td>Terminal control mode</td><td>Used to set the mode of terminal control.
0: Two-wire control 1, the enabling consistent with the direction. This mode is widely used. The defined FWD/REV terminal command determines the motor rotation direction.
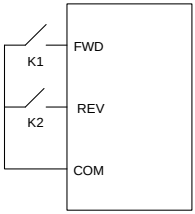

<table>
<tr><th>FWD</th><th>REV</th><th>Running command</th></tr>
<tr><td>OFF</td><td>OFF</td><td>Stop</td></tr>
<tr><td>ON</td><td>OFF</td><td>Forward running</td></tr>
<tr><td>OFF</td><td>ON</td><td>Reverse running</td></tr>
<tr><td>ON</td><td>ON</td><td>Hold</td></tr>
</table>
1: Two-wire control 2, the enabling separated from the direction. In this mode, FWD is the enabling terminal. The direction depends on the defined REV state.
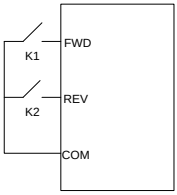

<table>
<tr><th>FWD</th><th>REV</th><th>Running command</th></tr>
<tr><td>OFF</td><td>OFF</td><td>Stop</td></tr>
<tr><td>ON</td><td>OFF</td><td>Forward running</td></tr>
<tr><td>OFF</td><td>ON</td><td>Stop</td></tr>
<tr><td>ON</td><td>ON</td><td>Reverse running</td></tr>
</table>
2: Three-wire control 1. This mode defines Sin as the enabling terminal, and the running command is generated by FWD, while the direction is controlled by REV. During running, the Sin terminal needs to be closed, and terminal FWD generates a rising edge signal, then the VFD starts to run in the direction set by the state of terminal REV; the VFD needs to be stopped by disconnecting terminal Sin.</td><td>0</td><td>◎</td></tr>
</table>

<table>
<tr><th>Function code</th><th>Name</th><th>Description</th><th>Default</th><th>Modify</th></tr>
<tr><td></td><td></td><td>
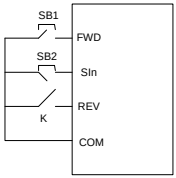

The direction control is as follows during running:
<table>
<tr><th>Sin</th><th>REV</th><th>Previous direction</th><th>Present direction</th></tr>
<tr><td rowspan="2">ON</td><td rowspan="2">OFF → ON</td><td>Run forward</td><td>Run reversely</td></tr>
<tr><td>Run reversely</td><td>Run forward</td></tr>
<tr><td rowspan="2">ON</td><td rowspan="2">ON→ OFF</td><td>Run reversely</td><td>Run forward</td></tr>
<tr><td>Run forward</td><td>Run reversely</td></tr>
<tr><td rowspan="2">ON→ OFF</td><td>ON</td><td colspan="2" rowspan="2">Decelerate to stop</td></tr>
<tr><td>OFF</td></tr>
</table>
Sin: Three-wire control; FWD: Forward running; REV: Reverse running
3: Three-wire control 2. This mode defines Sin as the enabling terminal, and the running command is generated by FWD or REV, but the direction is controlled by both FWD and REV. During running, the Sin terminal needs to be closed, and terminal FWD or REV generates a rising edge signal to control the running and direction of the VFD; the VFD needs to be stopped by disconnecting terminal Sin.
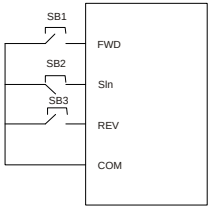

</td><td></td><td></td></tr>
</table>

<table>
<tr><th>Function code</th><th>Name</th><th>Description</th><th>Default</th><th>Modify</th></tr>
<tr><td></td><td></td><td>
<table>
<tr><th>Sin</th><th>FWD</th><th>REV</th><th>Running direction</th></tr>
<tr><td rowspan="2">ON</td><td rowspan="2">OFF→ ON</td><td>ON</td><td>Run forward</td></tr>
<tr><td>OFF</td><td>Run forward</td></tr>
<tr><td rowspan="2">ON</td><td>ON</td><td rowspan="2">OFF→ON</td><td>Run reversely</td></tr>
<tr><td>OFF</td><td>Run reversely</td></tr>
<tr><td>ON→ OFF</td><td></td><td></td><td>Decelerate to stop</td></tr>
</table>
Sin: Three-wire control; FWD: Forward running; REV: Reverse running
Note: For two-wire controlled running mode, when the FWD/REV terminal is valid, if the VFD stops due to a stop command given by another source, the VFD does not run again after the stop command disappears even if the control terminal FWD/REV is still valid. To make the VFD run, you need to trigger FWD/REV again, for example, PLC single-cycle stop, fixed-length stop, and valid STOP/RST stop during terminal control. (See P07.04.)
</td><td></td><td></td></tr>
<tr><td>P05.12</td><td>S1 switch-on delay</td><td rowspan="7">Used to specify the delay time corresponding to the electrical level changes when the programmable input terminals switch on or switch off.
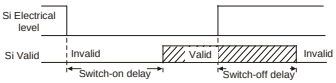

Setting range: 0.000–50.000s
Note: After a virtual terminal is enabled, the state of the terminal can be changed only in communication mode. The communication</td><td>0.000s</td><td>○</td></tr>
<tr><td>P05.13</td><td>S1 switch-off delay</td><td>0.000s</td><td>○</td></tr>
<tr><td>P05.14</td><td>S2 switch-on delay</td><td>0.000s</td><td>○</td></tr>
<tr><td>P05.15</td><td>S2 switch-off delay</td><td>0.000s</td><td>○</td></tr>
<tr><td>P05.16</td><td>S3 switch-on delay</td><td>0.000s</td><td>○</td></tr>
<tr><td>P05.17</td><td>S3 switch-off delay</td><td>0.000s</td><td>○</td></tr>
<tr><td>P05.18</td><td>S4 switch-on delay</td><td>0.000s</td><td>○</td></tr>
</table>

Function code	Name	Description	Default	Modify
P05.19	S4 switch-off delay	address is 0x200A.	0.000s	○
P05.20	HDIA switch-on delay		0.000s	○
P05.21	HDIA switch-off delay		0.000s	○
P05.22	HDIB switch-on delay		0.000s	○
P05.23	HDIB switch-off delay		0.000s	○
P05.24	AI1 lower limit	Used to define the relationship between the analog input voltage and its corresponding setting. When the analog input voltage exceeds the range from the upper limit to the lower limit, the upper limit or lower limit is used. When the analog input is current input, 0mA–20mA current corresponds to 0V–10V voltage. In different applications, 100.0% of the analog setting corresponds to different nominal values. See the descriptions of each application section for details. The following figure illustrates the cases of several settings: 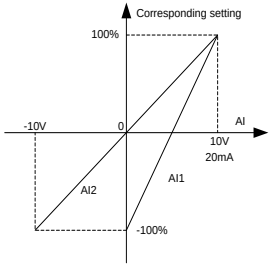	0.00V	○
P05.25	Corresponding setting of AI1 lower limit		0.0%	○
P05.26	AI1 upper limit		10.00V	○
P05.27	Corresponding setting of AI1 upper limit		100.0%	○
P05.28	AI1 input filter time		0.030s	○
P05.29	AI2 lower limit		-10.00V	○
P05.30	Corresponding setting of AI2 lower limit		-100.0%	○
P05.31	AI2 middle value 1		0.00V	○
P05.32	Corresponding setting of AI2 middle value 1		0.0%	○
P05.33	AI2 middle value 2		0.00V	○

Function code	Name	Description	Default	Modify
P05.34	Corresponding setting of AI2 middle value 2	Input filter time: to adjust the sensitivity of analog input. Increasing the value properly can enhance analog input anti-interference but may reduce the sensitivity of analog input. **Note:** AI1 supports the 0–10V/0–20mA input. When AI1 selects the 0–20mA input, the corresponding voltage of 20mA is 10V. AI2 supports the -10–+10V input. Setting range of P05.24: 0.00V–P05.26 Setting range of P05.25: -300.0%–300.0% Setting range of P05.26: P05.24–10.00V Setting range of P05.27: -300.0%–300.0% Setting range of P05.28: 0.000s–10.000s Setting range of P05.29: -10.00V–P05.31 Setting range of P05.30: -300.0%–300.0% Setting range of P05.31: P05.29–P05.33 Setting range of P05.32: -300.0%–300.0% Setting range of P05.33: P05.31–P05.35 Setting range of P05.34: -300.0%–300.0% Setting range of P05.35: P05.33–10.00V Setting range of P05.36: -300.0%–300.0% Setting range of P05.37: 0.000s–10.000s	0.0%	○
P05.35	AI2 upper limit		10.00V	○
P05.36	Corresponding setting of AI2 upper limit		100.0%	○
P05.37	AI2 input filter time		0.030s	○
P05.38	HDIA high-speed pulse input function selection	0: Input set through frequency 1: Reserved 2: Input set through encoder, used together with HDIB	0	◎
P05.39	HDIA lower limit frequency	0.000 kHz – P05.41	0.000 kHz	○
P05.40	Corresponding setting of HDIA lower limit frequency	-300.0%–300.0%	0.0%	○
P05.41	HDIA upper limit frequency	P05.39–50.000kHz	50.000 kHz	○
P05.42	Corresponding setting of HDIA upper limit frequency	-300.0%–300.0%	100.0%	○

Function code	Name	Description	Default	Modify
P05.43	HDIA frequency input filter time	0.000s–10.000s	0.030s	○
P05.44	HDIB high-speed pulse input function selection	0: Input set through frequency 1: Reserved 2: Input set through encoder, used together with HDIA	0	◎
P05.45	HDIB lower limit frequency	0.000 kHz – P05.47	0.000 kHz	○
P05.46	Corresponding setting of HDIB lower limit frequency	-300.0%–300.0%	0.0%	○
P05.47	HDIB upper limit frequency	P05.45–50.000kHz	50.000 kHz	○
P05.48	Corresponding setting of HDIB upper limit frequency	-300.0%–300.0%	100.0%	○
P05.49	HDIB frequency input filter time	0.000s–10.000s	0.030s	○
P05.50	AI1 input signal type	0: Voltage 1: Current **Note:** You can set the AI1 input signal type through the corresponding function code.	0	◎
P05.51–P05.52	Reserved			

P06—Output terminals

Function code	Name	Description	Default	Modify
P06.00	HDO output type	0: Open collector high-speed pulse output. The max. frequency of pulse is 50.00kHz. For details about the related functions, see P06.27–P06.31. 1: Open collector output. For details about the related functions, see P06.02.	0	◎

Function code	Name	Description	Default	Modify
P06.01	Y1 output	0: Invalid	0	○
P06.02	HDO output	1: In running	0	○
P06.03	RO1 output	2: In forward running	1	○
P06.04	RO2 output	3: In reverse running 4: In jogging 5: VFD fault 6: Frequency level detection FDT1 7: Frequency level detection FDT2 8: Frequency reached 9: Running in zero speed 10: Reach upper limit frequency 11: Reach lower limit frequency 12: Ready to run 13: In pre-exciting 14: Overload pre-alarm 15: Underload pre-alarm 16: Simple PLC stage completed 17: Simple PLC cycle completed 18: Reach set counting value 19: Reach designated counting value 20: External fault is valid 21: Reserved 22: Reach running time 23: Virtual terminal output of Modbus/Modbus TCP communication 24: Virtual terminal output of POROFIBUS/CANopen/DeviceNet communication 25: Virtual terminal output of Ethernet communication 26: DC bus voltage established 27: Z pulse output 28: During pulse superposition 29: STO action 30: Positioning completed 31: Spindle zeroing completed 32: Spindle scale-division completed 33: Speed limit reached in torque control	5	○

<table>
<tr><th>Function code</th><th>Name</th><th>Description</th><th>Default</th><th>Modify</th></tr>
<tr><td></td><td></td><td>34: Virtual terminal output of EtherCAT/PROFINET/EtherNet IP communication
35: Reserved
36: Speed/position control switchover completed
37: Any frequency reached
38–40: Reserved
41: Y1 from the programmable card
42: Y2 from the programmable card
43: HDO from the programmable card
44: RO1 from the programmable card
45: RO2 from the programmable card
46: RO3 from the programmable card
47: RO4 from the programmable card
48: EC PT100 detected OH pre-alarm
49: EC PT1000 detected OH pre-alarm
50: AI/AO detected OH pre-alarm
51: Stopped or running at zero speed
52: Disconnection detected in tension control
53: Roll diameter setting reached
54: Max. roll diameter reached
55: Min. roll diameter reached
56: Fire control mode enabled
57–63: Reserved</td><td></td><td></td></tr>
<tr><td>P06.05</td><td>Output terminal polarity selection</td><td>Used to set the polarity of output terminals.
When a bit is 0, the input terminal is positive;
When a bit is 1, the input terminal is negative.
<table><tr><td>BIT3</td><td>BIT2</td><td>BIT1</td><td>BIT0</td></tr><tr><td>RO2</td><td>RO1</td><td>HDO</td><td>Y1</td></tr></table>Setting range: 0x00–0x0F</td><td>0x00</td><td>○</td></tr>
<tr><td>P06.06</td><td>Y1 switch-on delay</td><td rowspan="3">Used to specify the delay time corresponding to the electrical level changes when the programmable output terminals switch on or switch off.</td><td>0.000s</td><td>○</td></tr>
<tr><td>P06.07</td><td>Y1 switch-off delay</td><td>0.000s</td><td>○</td></tr>
<tr><td>P06.08</td><td>HDO switch-on delay</td><td>0.000s</td><td>○</td></tr>
</table>

Function code	Name	Description	Default	Modify
P06.09	HDO switch-off delay	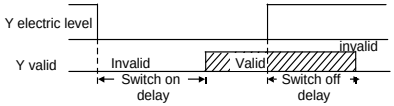 Setting range: 0.000–50.000s **Note:** P06.08 and P06.09 are valid only when P06.00=1.	0.000s	○
P06.10	RO1 switch-on delay		0.000s	○
P06.11	RO1 switch-off delay		0.000s	○
P06.12	RO2 switch-on delay		0.000s	○
P06.13	RO2 switch-off delay		0.000s	○
P06.14	AO1 output	0: Running frequency	0	○
P06.15	Reserved	1: Set frequency		
P06.16	HDO high-speed pulse output	2: Ramp reference frequency 3: Rotational speed (100% corresponds to the speed corresponding to max. output frequency) 4: Output current (100% corresponds to twice the VFD rated current) 5: Output current (100% corresponds to twice the motor rated current) 6: Output voltage (100% corresponds to 1.5 times the VFD rated voltage) 7: Output power (100% corresponds to twice the motor rated power) 8: Set torque (100% corresponds to twice the motor rated torque) 9: Output torque (Absolute value, 100% corresponds to twice the motor rated torque) 10: AI1 input 11: AI2 input 12: AI3 input 13: HDIA input 14: Value 1 set through Modbus/Modbus TCP communication 15: Value 2 set through Modbus/Modbus TCP communication 16: Value 1 set through PROFIBUS/CANopen/DeviceNet	0	○

Function code	Name	Description	Default	Modify
		communication 17: Value 2 set through PROFIBUS/CANopen/DeviceNet communication 18: Value 1 set through Ethernet communication 19: Value 2 set through Ethernet communication 20: HDIB input 21: Value 1 set through EtherCAT/PROFINET/EtherNet IP communication 22: Torque current (bipolar, 0–Triple the motor rated current) 23: Exciting current (bipolar, 0–Triple the motor rated current) 24: Set frequency (bipolar) 25: Ramp reference frequency (bipolar) 26: Rotational speed (bipolar) 27: Value 2 set through EtherCAT/PROFINET/EtherNet IP communication 28: AO1 from the programmable card 29: AO2 from the programmable card 30: Rotational speed (100% corresponds to twice the motor rated synchronous speed) 31: Output torque (Actual value, 100% corresponds to twice the motor rated torque) 32: AI/AO temperature detection output 33–63: Reserved **Note:** When the output comes from the programmable card (28–29), if the card is a Codesys programmable card, P27.00 must be set to 1. When AO1 is of the current output type, 100% corresponds to 20mA; when AO1 is of the voltage output type, 100% corresponds to		

Function code	Name	Description	Default	Modify
		10V; 100% of HDO corresponds to the output of P06.30.		
P06.17	AO1 output lower limit	Used to define the relationship between the output value and analog output. When the output value exceeds the allowed range, the output uses the lower limit or upper limit. When the analog output is current output, 1mA equals 0.5V. In different cases, the corresponding analog output of 100% of the output value is different. See each application for detailed information. 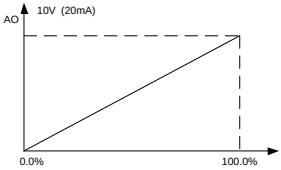 Setting range of P06.17: -300.0%–P06.19 Setting range of P06.18: 0.00V–10.00V Setting range of P06.19: P06.17–300.0% Setting range of P06.20: 0.00V–10.00V Setting range of P06.21: 0.000s–10.000s	0.0%	○
P06.18	AO1 output corresponding to lower limit		0.00V	○
P06.19	AO1 output upper limit		100.0%	○
P06.20	AO1 output corresponding to upper limit		10.00V	○
P06.21	AO1 output filter time		0.000s	○
P06.22	Reserved			
P06.23	PTC constant output current setting	0.000–20.000mA	4.000mA	○
P06.24	PTC resistance alarm threshold	0–60000Ω	750Ω	○
P06.25	PTC resistance alarm recovery threshold	0–60000Ω	150Ω	○
P06.26	Actual PTC resistance	0–60000Ω	0Ω	●
P06.27	HDO output lower limit	-300.0%–P06.29	0.0%	○
P06.28	HDO output corresponding to lower limit	0.00–50.00kHz	0.00kHz	○

Function code	Name	Description	Default	Modify
P06.29	HDO output upper limit	P06.27–300.0%	100.0%	○
P06.30	HDO output corresponding to upper limit	0.00–50.00kHz	50.00 kHz	○
P06.31	HDO output filter time	0.000s–10.000s	0.000s	○
P06.32	Reserved			
P06.33	Frequency reach detection value	0.00Hz–P00.03	1.00Hz	○
P06.34	Frequency reach detection time	0.0s–3600.0s	0.5s	○

P07—HMI

Function code	Name	Description	Default	Modify
P07.00	User password	0–65535 When you set the function code to a non-zero number, password protection is enabled. If you set the function code to 00000, the previous user password is cleared and password protection is disabled. After the user password is set and takes effect, you cannot enter the parameter menu if you enter an incorrect password. Please remember your password and save it in a secure place. After you exit the function code editing interface, the password protection function is enabled within 1 minute. If password protection is enabled, "0.0.0.0.0" is displayed when you press the PRG/ESC key again to enter the function code editing interface. You need to enter the correct user password to enter the interface. **Note:** Restoring the default values may delete the user password. Exercise caution when using this function.	0	○

Function code	Name	Description	Default	Modify
P07.01	Reserved			
P07.02	Key function selection	Range: 0x00–0x27 Ones place: Function of QUICK/JOG 0: No function 1: Jog 2: Reserved 3: Switch between forward and reverse rotating 4: Clear the UP/DOWN setting 5: Coast to stop 6: Switch command channels in sequence 7: Reserved Tens place: Reserved	0x01	◎
P07.03	Sequence of switching running-command channels by pressing QUICK	When P07.02=6, set the sequence of switching running-command channels by pressing this key. 0: Keypad→Terminal→Communication 1: Keypad←→Terminal 2: Keypad←→Communication 3: Terminal←→Communication	0	○
P07.04	Stop function validity of STOP/RST	The function code specifies the stop function validity of STOP/RST. For fault reset, STOP/RST is valid in any conditions. 0: Valid only for keypad control 1: Valid both for keypad and terminal control 2: Valid both for keypad and communication control 3: Valid for all control modes	0	○
P07.05–P07.07	Reserved			
P07.08	Frequency display coefficient	0.01–10.00 Display frequency = Running frequency * P07.08	1.00	○
P07.09	Rotational speed display coefficient	0.1–999.9% Mechanical rotation speed = 120 * (Displayed running frequency) *×P07.09/(Number of motor pole pairs)	100.0%	○

Function code	Name	Description	Default	Modify
P07.10	Linear speed display coefficient	0.1–999.9% Linear speed = (Mechanical rotation speed) × P07.10	1.0%	○
P07.11	Rectifier bridge temperature	-20.0–120.0°C	0.0°C	●
P07.12	Inverter temperature	-20.0–120.0°C	0.0°C	●
P07.13	Control board software version	1.00–655.35	Depends on version	●
P07.14	Local accumulative running time	0–65535h	0h	●
P07.15	VFD electricity consumption high-order bits	Used to display the electricity consumption of the VFD. VFD electricity consumption = P07.15*1000+P07.16 Setting range of P07.15: 0–65535 kWh (*1000) Setting range of P07.16: 0.0–999.9 kWh	0kWh	●
P07.16	VFD electricity consumption low-order bits		0.0kWh	●
P07.17	VFD type	0x0000–0xFFF1 Bit0–bit3: G type or P type 0x0: G type 0x1: P type Bit4–bit11: Chip type and manufacturer 0x00: DSP (TI) 0x01–0x20: Reserved 0x21: MCU(ST) 0x22–0XFF: Reserved Bit12–bit15: VFD series 0x0:GD350 0x1:GD350A 0x2:GD350-UL 0x3:GD350 IP55 0x4–0xF: Reserved **Note:** Bit4–bit8 indicates chip manufacturers (such as TI, ST), bit9–bit11 indicates chip types (such as DSP, MCU).	Model depended	●
P07.18	VFD rated power	0.4–3000.0kW	Model	●

Function code	Name	Description	Default	Modify
			depended	
P07.19	VFD rated voltage	50–1200V	Model depended	●
P07.20	VFD rated current	0.1–6000.0A	Model depended	●
P07.21	Factory bar code 1	0x0000–0xFFFF	Model depended	●
P07.22	Factory bar code 2	0x0000–0xFFFF	Model depended	●
P07.23	Factory bar code 3	0x0000–0xFFFF	Model depended	●
P07.24	Factory bar code 4	0x0000–0xFFFF	Model depended	●
P07.25	Factory bar code 3	0x0000–0xFFFF	Model depended	●
P07.26	Factory bar code 4	0x0000–0xFFFF	Model depended	●
P07.27	Present fault type	0: No fault	0	●
P07.28	Last fault type	1: Inverter unit U phase protection (OUt1)	0	●
P07.29	2nd-last fault type	2: Inverter unit V phase protection (OUt2)	0	●
P07.30	3rd-last fault type	3: Inverter unit W phase protection (OUt3)	0	●
P07.31	4th-last fault type	4: Overcurrent during acceleration (OC1)	0	●
P07.32	5th-last fault type	5: Overcurrent during deceleration (OC2) 6: Overcurrent during constant speed (OC3) 7: Overvoltage during acceleration (OV1) 8: Overvoltage during deceleration (OV2) 9: Overvoltage during constant speed (OV3) 10: Bus undervoltage fault (UV) 11: Motor overload (OL1) 12: VFD overload (OL2) 13: Phase loss on input side (SPI) 14: Phase loss on output side (SPO) 15: Rectifier module overheat (OH1) 16: Inverter module overheat (OH2) 17: External fault (EF) 18: Modbus/Modbus TCP communication fault (CE)	0	●

Function code	Name	Description	Default	Modify
		19: Current detection fault (ItE) 20: Motor autotuning fault (tE) 21: EEPROM operation fault (EEP) 22: PID feedback offline fault (PIDE) 23: Braking unit fault (bCE) 24: Running time reached (END) 25: Electronic overload (OL3) 26: Keypad communication error (PCE) 27: Parameter upload error (UPE) 28: Parameter download error (DNE) 29: PROFIBUS communication fault (E-DP) 30: Ethernet communication fault (E-NET) 31: CANopen communication fault (E-CAN) 32: To-ground short-circuit fault 1 (ETH1) 33: To-ground short-circuit fault 2 (ETH2) 34: Speed deviation fault (dEu) 35: Maladjustment fault (STo) 36: Underload fault (LL) 37: Encoder offline fault (ENC1o) 38: Encoder reversal fault (ENC1d) 39: Encoder Z pulse offline fault (ENC1Z) 40: Safe torque off (STO) 41: Channel H1 safety circuit exception (STL1) 42: Channel H2 safety circuit exception (STL2) 43: Channel H1 and H2 exception (STL3) 44: Safety code FLASH CRC fault (CrCE) 45: Programmable card customized fault 1 (P-E1) 46: Programmable card customized fault 2 (P-E2) 47: Programmable card customized fault 3 (P-E3) 48: Programmable card customized fault 4 (P-E4) 49: Programmable card customized fault 5 (P-E5)		

Function code	Name	Description	Default	Modify
		50: Programmable card customized fault 6 (P-E6) 51: Programmable card customized fault 7 (P-E7) 52: Programmable card customized fault 8 (P-E8) 53: Programmable card customized fault 9 (P-E9) 54: Programmable card customized fault 10 (P-E10) 55: Duplicate card type (E-Err) 56: Encoder UVW loss fault (ENCUV) 57: PROFIBUS communication fault (E-PN) 58: CANopen communication fault (SECAN) 59: Motor over-temperature fault (OT) 60: Failure to identify the card at slot 1 (F1-Er) 61: Failure to identify the card at slot 2 (F2-Er) 62: Failure to identify the card at slot 3 (F3-Er) 63: Communication timeout of the card at slot 1 (C1-Er) 64: Communication timeout of the card at slot 2 (C2-Er) 65: Communication timeout of the card at slot 3 (C3-Er) 66: EtherCAT communication fault (E-CAT) 67: Bacnet communication fault (E-BAC) 68: DeviceNet communication fault (E-DEV) 69: CAN slave fault in master/slave synchronization (S-Err) 70: EC PT100 detected overheating (OtE1) 71: EC PT1000 detected overheating (OtE2) 72: EtherNet/IP communication timeout (E-EIP) 73: No upgrade bootload (E-PAO) 74: AI1 disconnected (E-AI1) 75: AI2 disconnected (E-AI2) 76: AI3 disconnected (E-AI3)		

Function code	Name	Description	Default	Modify
P07.33	Running frequency at present fault	0.00Hz–P00.03	0.00Hz	●
P07.34	Ramp reference frequency at present fault	0.00Hz–P00.03	0.00Hz	●
P07.35	Output voltage at present fault	0–1200V	0V	●
P07.36	Output current at present fault	0.0–6300.0A	0.0A	●
P07.37	Bus voltage at present fault	0.0–2000.0V	0.0V	●
P07.38	Max. temperature at present fault	-20.0–120.0°C	0.0°C	●
P07.39	Input terminal status at present fault	0x0000–0xFFFF	0	●
P07.40	Output current status at present fault	0x0000–0xFFFF	0	●
P07.41	Running frequency at last fault	0.00Hz–P00.03	0.00Hz	●
P07.42	Ramp reference frequency at last fault	0.00Hz–P00.03	0.00Hz	●
P07.43	Output voltage at last fault	0–1200V	0V	●
P07.44	Output current at last fault	0.0–6300.0A	0.0A	●
P07.45	Bus voltage at last fault	0.0–2000.0V	0.0V	●
P07.46	Max. temperature at last fault	-20.0–120.0°C	0.0°C	●
P07.47	Input terminal status at last fault	0x0000–0xFFFF	0x0000	●
P07.48	Output terminal status at last fault	0x0000–0xFFFF	0x0000	●
P07.49	Running frequency at 2nd-last fault	0.00Hz–P00.03	0.00Hz	●

Function code	Name	Description	Default	Modify
P07.50	Ramp reference frequency at 2nd-last fault	0.00Hz–P00.03	0.00Hz	●
P07.51	Output voltage at 2nd-last fault	0–1200V	0V	●
P07.52	Output current at 2nd-last fault	0.0–6300.0A	0.0A	●
P07.53	Bus voltage at 2nd-last fault	0.0–2000.0V	0.0V	●
P07.54	Max. temperature at 2nd-last fault	-20.0–120.0°C	0.0°C	●
P07.55	Input terminal status at 2nd-last fault	0x0000–0xFFFF	0x0000	●
P07.56	Output terminal status at 2nd-last fault	0x0000–0xFFFF	0x0000	●

P08—Enhanced functions

Function code	Name	Description	Default	Modify
P08.00	ACC time 2	For details, see P00.11 and P00.12. The VFD has four groups of ACC/DEC time, which can be selected by P05. The factory default ACC/DEC time of the VFD is the first group. Setting range: 0.0–3600.0s	Model depended	○
P08.01	DEC time 2		Model depended	○
P08.02	ACC time 3		Model depended	○
P08.03	DEC time 3		Model depended	○
P08.04	ACC time 4		Model depended	○
P08.05	DEC time 4		Model depended	○
P08.06	Running frequency of jog	Used to define the reference frequency during jogging. Setting range: 0.00Hz–P00.03 (Max. output frequency)	5.00Hz	○
P08.07	ACC time for jog	ACC time for jogging means the time needed	Model	○

Function code	Name	Description	Default	Modify
		for the VFD to accelerate from 0Hz to the	depended	
P08.08	DEC time for jog	max. output frequency (P00.03). DEC time for jogging means the time needed for the VFD to decelerate from the max. output frequency (P00.03) to 0Hz. Setting range: 0.0–3600.0s	Model depended	○
P08.09	Jump frequency 1	When the set frequency is within the range of jump frequency, the VFD runs at the boundary of jump frequency. The VFD can avoid mechanical resonance points by setting jump frequencies. The VFD supports the setting of three jump frequencies. If the jump frequency points are set to 0, this function is invalid. 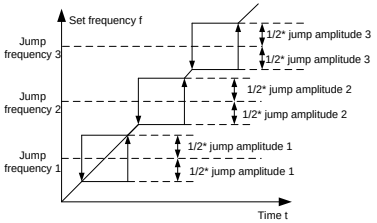 Setting range: 0.00Hz–P00.03 (Max. output frequency)	0.00Hz	○
P08.10	Jump frequency amplitude 1		0.00Hz	○
P08.11	Jump frequency 2		0.00Hz	○
P08.12	Jump frequency amplitude 2		0.00Hz	○
P08.13	Jump frequency 3		0.00Hz	○
P08.14	Jump frequency amplitude 3		0.00Hz	○
P08.15	Amplitude of wobbling frequency	0.0–100.0% (of the set frequency)	0.0%	○
P08.16	Amplitude of sudden jump frequency	0.0–50.0% (of the amplitude of wobbling frequency)	0.0%	○
P08.17	Rise time of wobbling frequency	0.1–3600.0s	5.0s	○
P08.18	Fall time of wobbling frequency	0.1–3600.0s	5.0s	○
P08.19	Switching frequency of ACC/DEC time	0.00–P00.03 (Max. output frequency) 0.00Hz: No switchover If the running frequency is greater than P08.19, switch to ACC/DEC time 2.	0.00Hz	○
P08.20	Frequency threshold of the	0.00–50.00Hz	2.00Hz	○

Function code	Name	Description	Default	Modify
	start of droop control			
P08.21	Reference frequency of ACC/DEC time	0: Max. output frequency 1: Set frequency 2: 100Hz **Note:** Valid only for straight-line ACC/DEC	0	◎
P08.22	Output torque display selection	0: Based on torque current 1: Based on output power	0	○
P08.23	Number of decimal points of frequency	0: Two 1: One	0	○
P08.24	Number of decimal places of linear speed	0: No decimal place 1: One 2: Two 3: Three	0	○
P08.25	Set counting value	P08.26–65535	0	○
P08.26	Designated counting value	0–P08.25	0	○
P08.27	Set running time	0–65535min	0min	○
P08.28	Auto fault reset count	Auto fault reset count: When the VFD uses automatic fault reset, it is used to set the number of automatic fault reset times. When the number of continuous reset times exceeds the value, the VFD reports a fault and stops. Auto fault reset interval: Time interval from when a fault occurred to when automatic fault reset takes effect. After VFD starts, If no fault occurred within 600s after the VFD starts, the number of automatic fault reset times is cleared. Setting range of P08.28: 0–10 Setting range of P08.29: 0.1–3600.0s	0	○
P08.29	Auto fault reset interval		1.0s	○
P08.30	Frequency decrease ratio in drop control	The output frequency of the VFD changes as the load changes. The function code is mainly used to balance the power when several motors drive a same load. Setting range: 0.00–50.00Hz	0.00Hz	○

Function code	Name	Description	Default	Modify
P08.31	Channel for switching between motor 1 and motor 2	0x00–0x14 Ones: Switchover channel 0: Switch over by terminal 1: Switch over by Modbus/Modbus TCP communication 2: Switch over by PROFIBUS/CANopen/DeviceNet communication 3: Switch over by Ethernet communication 4: Switch over by EtherCAT/PROFINET/EtherNet IP communication Tens: Motor switchover during running 0: Disable switchover during running 1: Enable switchover during running	0x00	◎
P08.32	FDT1 electrical level detection value	When the output frequency exceeds the corresponding frequency of FDT electrical level, the multifunction digital output terminal continuously outputs the signal of "Frequency level detection FDT". The signal is invalid only when the output frequency decreases to a value lower than the frequency corresponding to (FDT electrical level—FDT lagging detection value). 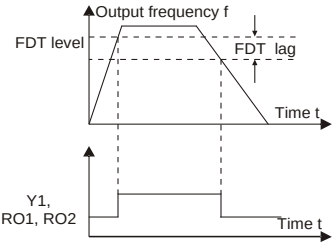 Setting range of P08.32: 0.00Hz–P00.03 (Max. output frequency)	50.00Hz	○
P08.33	FDT1 lagging detection value		5.0%	○
P08.34	FDT2 electrical level detection value		50.00Hz	○
P08.35	FDT2 lagging detection value		5.0%	○

Function code	Name	Description	Default	Modify
		Setting range of P08.33: 0.0–100.0% (FDT1 electrical level) Setting range of P08.34: 0.00Hz–P00.03 (Max. output frequency) Setting range of P08.35: 0.0–100.0% (FDT2 electrical level)		
P08.36	Detection value for frequency being reached	When the output frequency is within the detection range, the multifunction digital output terminal outputs the signal of "Frequency reached". 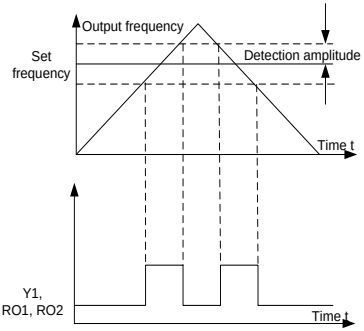 Setting range: 0.00Hz–P00.03 (Max. output frequency)	0.00Hz	○
P08.37	Enabling energy consumption braking	0: Disable 1: Enable	1	○
P08.38	Energy consumption braking threshold voltage	Used to set the starting bus voltage of energy consumption braking. Adjust this value properly to achieve effective braking for the load. The default value varies depending on the voltage class. Setting range: 200.0–2000.0V	For 220V: 380.0V; For 380V: 700.0V; For 660V: 1120.0V	○
P08.39	Cooling-fan running mode	0: Normal mode 1: Permanent running after power-on 2: Running mode 2	0	○
P08.40	PWM selection	0x0000–0x1121 Ones place: PWM mode selection	0x1101	◎

Function code	Name	Description	Default	Modify
		0: PWM mode 1, 3PH modulation and 2PH modulation 1: PWM mode 2, 3PH modulation Tens place: PWM low-speed carrier limit 0: Low-speed carrier limit mode 1 1: Low-speed carrier limit mode 2 2: No limit Hundreds place: Deadzone compensation method 0: Compensation method 1 1: Compensation method 2 Thousands place: PWM loading mode selection 0: Interruptive loading 1: Normal loading		
P08.41	Overmodulation selection	0x0000–0x1111 Ones place: Whether to enable overmodulation 0: Disable overmodulation 1: Enable overmodulation Tens place: Overmodulation mode 0: Mild overmodulation 1: Deepened overmodulation Hundreds: Carrier frequency limit 0: Yes 1: No Thousands: Output voltage compensation 0: No 1: Yes	0x1001	◎
P08.42	Reserved			
P08.43	Reserved			
P08.44	UP/DOWN terminal control setting	0x000–0x221 Ones place: Frequency setting selection 0: The setting made through UP/DOWN is valid. 1: The setting made through UP/DOWN is invalid. Ones place: Frequency control selection	0x000	○

Function code	Name	Description	Default	Modify
		0: Valid only when P00.06=0 or P00.07=0 1: Valid for all frequency setting methods 2: Invalid for multi-step speed running when multi-step speed running has the priority Hundreds place: Action selection for stop 0: Setting is valid. 1: Valid during running, cleared after stop 2: Valid during running, cleared after a stop command is received		
P08.45	Frequency increment integral rate of the UP terminal	0.01–50.00Hz/s **Note:** The value is also used as the frequency increment or decrement that is made by pressing the UP/DOWN key on the LCD keypad.	0.50Hz/s	○
P08.46	Frequency integral rate of the DOWN terminal	0.01–50.00Hz/s	0.50Hz/s	○
P08.47	Action selection at power-off during frequency setting	0x000–0x111 Ones place: Action selection at power-off during frequency adjusting through digitals. 0: Save the setting at power-off. 1: Clear the setting at power-off. Action selection at power-off during frequency adjusting through Modbus/ Modbus TCP communication 0: Save the setting at power-off. 1: Clear the setting at power-off. Hundreds place: Action selection at power-off during frequency adjusting through other communication methods 0: Save the setting at power-off. 1: Clear the setting at power-off.	0x000	○
P08.48	Initial electricity consumption high-order bits	Used to set the initial electricity consumption. Initial electricity consumption =P08.48*1000+P08.49 Setting range of P08.48: 0–59999 kWh (k) Setting range of P08.49: 0.0–999.9 kWh	0kWh	○
P08.49	Initial electricity consumption low-order bits		0.0kWh	○

Function code	Name	Description	Default	Modify
P08.50	Magnetic flux braking	Used to enable magnetic flux braking. 0: Invalid 100–150: A greater coefficient indicates greater braking strength. The VFD can quickly slow down the motor by increasing the magnetic flux. The energy generated by the motor during braking can be transformed into heat energy by increasing the magnetic flux. The VFD monitors the state of the motor continuously even during the magnetic flux period. Magnetic flux braking can be used for motor stop, as well as for motor rotation speed change. The other advantages include: Braking is performed immediately after the stop command is given. The braking can be started without waiting for magnetic flux weakening. The cooling is better. The current of the stator other than the rotor increases during magnetic flux braking, while the cooling of the stator is more effective than the rotor.	0	○
P08.51	VFD input power factor	Used to adjust the display value on the AC input side. 0.00–1.00	0.56	○
P08.52	STO lock selection	0: Lock upon STO alarm Lock upon STO alarm indicates resetting is required after state restoration if STO occurs. 1: No lock on STO alarm No lock on STO alarm indicates STO alarm disappears automatically after state restoration if STO occurs.	0	○
P08.53	Upper limit frequency bias value in torque control	0.00 Hz–P00.03 (Max. output frequency) **Note:** Valid only for torque control.	0.00Hz	○
P08.54	Upper limit frequency	0: No limit on acceleration or deceleration 1: ACC/DEC time 1	0	○

Function code	Name	Description	Default	Modify
	ACC/DEC selection in torque control	2: ACC/DEC time 2 3: ACC/DEC time 3 4: ACC/DEC time 4		
P08.55	Enabling auto carrier frequency reduction	0: Disable 1: Enable **Note:** Automatic carrier frequency reduction indicates that the VFD automatically reduces the carrier frequency when detecting the heat sink temperature exceeds the rated temperature. When the temperature decreases to a certain degree, the carrier frequency recovers. This function reduces the chance of VFD overheat alarm.	0	○
P08.56	Min. carrier frequency	0.0–15.0kHz	Depends on model	●
P08.57	Temperature point of auto carrier frequency reduction	40.0–85.0°C	70.0°C	○
P08.58	Interval of carrier frequency reduction	0–30min	10min	○
P08.59	AI1 disconnection detection threshold	0–100%	0	○
P08.60	AI2 disconnection detection threshold	0–100%	0	○
P08.61	AI3 disconnection detection threshold	0–100%	0	○
P08.62	Output current filter time	0.000–10.000s	0.000s	○
P08.63	Output torque filter times	0–8	8	○

P09—PID control

Function code	Name	Description	Default	Modify
P09.00	PID reference source	When the frequency command selection (P00.06, P00.07) is 7 or the voltage setting channel selection ((P04.27) is 6, the VFD is	0	○

Function code	Name	Description	Default	Modify
		process PID controlled. The parameter determines the target given channel during the PID process. 0: Set by P09.01 1: AI1 2: AI2 3: AI3 4: High-speed pulse HDIA 5: Multi-step running 6: Modbus/Modbus TCP communication 7: PROFIBUS/CANopen/DeviceNet communication 8: Ethernet communication 9: High-speed pulse HDIB 10: EtherCAT/PROFINET/EtherNet IP communication 11: Programmable card 12: Reserved The set target of process PID is a relative value, for which 100% equals 100% of the feedback signal of the controlled system. The system always calculates a related value (0–100.0%).		
P09.01	PID digital setting	The function code is mandatory when P09.00=0. The base value of The function code is the feedback of the system. Setting range: -100.0%–100.0%	0.0%	○
P09.02	PID feedback source	Used to select PID feedback channel. 0: AI1 1: AI2 2: AI3 3: HDIA 4: Modbus/Modbus TCP communication 5: PROFIBUS/CANopen/DevicneNET communication 6: Ethernet communication 7: HDIB 8: EtherCAT/PROFINET/EtherNet IP	0	○

Function code	Name	Description	Default	Modify
		communication 9: Programmable card 10: Reserved **Note:** The reference channel and feedback channel cannot be duplicate. Otherwise, effective PID control cannot be achieved.		
P09.03	PID output characteristics selection	0: PID output is positive. When the feedback signal is greater than the PID reference value, the output frequency of the VFD will decrease to balance the PID. Example: PID control on strain during unwinding. 1: PID output is negative. When the feedback signal is greater than the PID reference value, the output frequency of the VFD will increase to balance the PID. Example: PID control on strain during unwinding.	0	○
P09.04	Proportional gain (Kp)	The function is applied to the proportional gain P of PID input. P determines the strength of the whole PID adjuster. The value 100 indicates that when the difference between the PID feedback value and given value is 100%, the range within which the PID regulator can regulate the output frequency command is the max. frequency (ignoring integral function and differential function). Setting range: 0.00–100.00	1.80	○
P09.05	Integral time (Ti)	It determines the speed of integral regulation made on the deviation between PID feedback and reference by PID regulator. When the deviation between PID feedback and reference is 100%, the regulation of integral regulator (ignoring integral and differential actions), after undergoing continuous regulation during this time period, can reach max. output frequency (P00.03) or max. voltage (P04.31). The shorter the integral time, the stronger the	0.90s	○

Function code	Name	Description	Default	Modify
		regulation intensity. Setting range: 0.00–10.00s		
P09.06	Differential time (Td)	It determines the intensity of the regulation made on the change rate of deviation between PID feedback and reference by PID regulator. If feedback changes by 100% during this period, the regulation of differential regulator (ignoring integral and differential actions) is max. output frequency (P00.03) or max. voltage (P04.31). The longer the derivative time, the stronger the regulation intensity. Setting range: 0.00–10.00s	0.00s	○
P09.07	Sampling cycle (T)	It means the sampling cycle of feedback. The regulator operates once during each sampling cycle. The larger the sampling cycle, the slower the response. Setting range: 0.001–1.000s	0.001s	○
P09.08	Limit of PID control deviation	It is the max. allowable deviation of PID system output value relative to closed-loop reference value. Within this limit, PID regulator stops regulation. Set this function code properly to regulate the precision and stability of PID system. 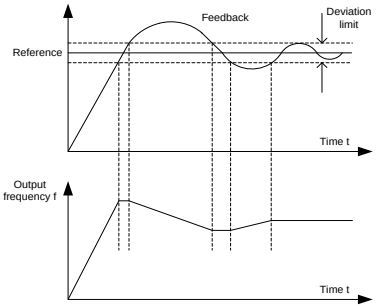 Setting range: 0.0–100.0%	0.0%	○
P09.09	Upper limit value of	Used to set the upper/lower limit value of PID	100.0%	○

Function code	Name	Description	Default	Modify
	PID output	regulator.		
P09.10	Lower limit value of PID output	100.0% corresponds to Max. output frequency (P00.03) or max. voltage (P04.31). Setting range of P09.09: P09.10–100.0% Setting range of P09.10: -100.0%–P09.09	0.0%	○
P09.11	Feedback offline detection value	Set PID feedback offline detection value, when the detection value is no more than the feedback offline detection value, and the duration exceeds the value set in P09.12, the VFD will report "PID feedback offline fault", and keypad displays PIDE. 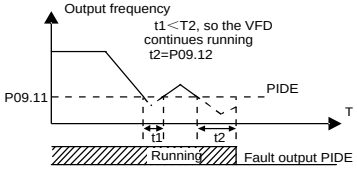 Setting range of P09.11: 0.0–100.0% Setting range of P09.12: 0.0–3600.0s	0.0%	○
P09.12	Feedback offline detection time		1.0s	○
P09.13	PID control selection	0x0000–0x1111 Ones place: 0: Continue integral control after the frequency reaches upper/lower limit 1: Stop integral control after the frequency reaches upper/lower limit Tens place: 0: The same with the main reference direction 1: Contrary to the main reference direction Hundreds place: 0: Limit based on the max. frequency 1: Limit based on A frequency Thousands place: 0: A+B frequency, acceleration /DEC of main reference A frequency source buffering is invalid 1: A+B frequency, acceleration/ DEC of main reference A frequency source buffering is	0x0001	○

Function code	Name	Description	Default	Modify
		valid, acceleration and DEC are determined by P08.04 (acceleration time 4).		
P09.14	Low-frequency proportional gain (Kp)	0.00–100.00 Low-frequency switching point: 5.00Hz, high-frequency switching point: 10.00Hz (P09.04 corresponds to high-frequency parameter), and the middle is the linear interpolation between these two points.	1.00	○
P09.15	ACC/DEC time of PID command	0.0–1000.0s	0.0s	○
P09.16	PID output filter time	0.000–10.000s	0.000s	○
P09.17	Reserved			
P09.18	Low-frequency integral time (Ti)	0.00–10.00s	0.90s	○
P09.19	Low-frequency differential time (Td)	0.00–10.00s	0.00s	○
P09.20	Low-frequency point of PID parameter switching	0.00Hz–P09.21	5.00Hz	○
P09.21	High-frequency point of PID parameter switching	P09.20–P00.03	10.00Hz	○
P09.22–P09.28	Reserved			

P10—Simple PLC and multi-step speed control

Function code	Name	Description	Default	Modify
P10.00	Simple PLC mode	0: Stop after running once; the VFD stops automatically after running for one cycle, and it can be started only after receiving running command. 1: Keep running in the final value after running once; The VFD keeps the running frequency and direction of the last section after a single cycle.	0	○

Function code	Name	Description	Default	Modify
		2: Cyclic running; the VFD enters the next cycle after completing one cycle until receiving stop command and stops.		
P10.01	Simple PLC memory selection	0: No memory after power-off 1: Memory after power-off; PLC memories its running stage and frequency before power-off.	0	○
P10.02	Multi-step speed 0	Frequency setting range for steps from step 0 to step 15: -300.0–300.0%. 100.0% corresponds to the max. output frequency P00.03. Running time setting range for steps from step 0 to step 15: 0.0–6553.5s(min). The time unit is specified by P10.37. When simple PLC operation is selected, it is required to set P10.02–P10.33 to determine the running frequency and running time of each step. **Note:** The symbol of multi-step speed determines the running direction of simple PLC, and the negative value means reverse running. 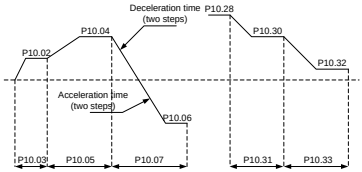 When selecting multi-step speed running, the multi-step speed is within the range of -fmax–fmax, and it can be set continuously. The start/stop of multi-step stop running is also determined by P00.01. The VFD supports the setting of speeds of 16 steps, which are set by combined codes of multi-step terminals 1–4 (set by S terminals, corresponding to function code P05.01–P05.06) and correspond to multi-step	0.0%	○
P10.03	Running time of step 0		0.0s(min)	○
P10.04	Multi-step speed 1		0.0%	○
P10.05	Running time of step 1		0.0s(min)	○
P10.06	Multi-step speed 2		0.0%	○
P10.07	Running time of step 2		0.0s(min)	○
P10.08	Multi-step speed 3		0.0%	○
P10.09	Running time of step 3		0.0s(min)	○
P10.10	Multi-step speed 4		0.0%	○
P10.11	Running time of step 4		0.0s(min)	○
P10.12	Multi-step speed 5		0.0%	○
P10.13	Running time of step 5		0.0s(min)	○
P10.14	Multi-step speed 6		0.0%	○
P10.15	Running time of step 6		0.0s(min)	○
P10.16	Multi-step speed 7		0.0%	○
P10.17	Running time of step 7		0.0s(min)	○
P10.18	Multi-step speed 8		0.0%	○
P10.19	Running time of step 8		0.0s(min)	○
P10.20	Multi-step speed 9		0.0%	○
P10.21	Running time of step 9		0.0s(min)	○

<table>
<tr><th>Function code</th><th>Name</th><th>Description</th><th>Default</th><th>Modify</th></tr>
<tr><td>P10.22</td><td>Multi-step speed 10</td><td rowspan="15">speed 0 to multi-step speed 15.
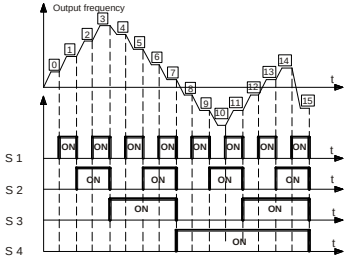

When terminal 1, terminal 2, terminal 3 and terminal 4 are OFF, the frequency input mode is set by P00.06 or P00.07. When terminal 1, terminal 2, terminal 3 and terminal 4 are not all OFF, the frequency set by multi-step speed will prevail, and the priority of multi-step setting is higher than that of the keypad, analog, high-speed pulse, PID, and communication settings.
The relation between terminal 1, terminal 2, terminal 3 and terminal 4 are shown in the following (T indicates terminal):
<table>
<tr><td>T1</td><td>OFF</td><td>ON</td><td>OFF</td><td>ON</td><td>OFF</td><td>ON</td><td>OFF</td><td>ON</td></tr>
<tr><td>T2</td><td>OFF</td><td>OFF</td><td>ON</td><td>ON</td><td>OFF</td><td>OFF</td><td>ON</td><td>ON</td></tr>
<tr><td>T3</td><td>OFF</td><td>OFF</td><td>OFF</td><td>OFF</td><td>ON</td><td>ON</td><td>ON</td><td>ON</td></tr>
<tr><td>T4</td><td>OFF</td><td>OFF</td><td>OFF</td><td>OFF</td><td>OFF</td><td>OFF</td><td>OFF</td><td>OFF</td></tr>
<tr><td>Step</td><td>0</td><td>1</td><td>2</td><td>3</td><td>4</td><td>5</td><td>6</td><td>7</td></tr>
<tr><td>T1</td><td>OFF</td><td>ON</td><td>OFF</td><td>ON</td><td>OFF</td><td>ON</td><td>OFF</td><td>ON</td></tr>
<tr><td>T2</td><td>OFF</td><td>OFF</td><td>ON</td><td>ON</td><td>OFF</td><td>OFF</td><td>ON</td><td>ON</td></tr>
<tr><td>T3</td><td>OFF</td><td>OFF</td><td>OFF</td><td>OFF</td><td>ON</td><td>ON</td><td>ON</td><td>ON</td></tr>
<tr><td>T4</td><td>ON</td><td>ON</td><td>ON</td><td>ON</td><td>ON</td><td>ON</td><td>ON</td><td>ON</td></tr>
<tr><td>Step</td><td>8</td><td>9</td><td>10</td><td>11</td><td>12</td><td>13</td><td>14</td><td>15</td></tr>
</table></td><td>0.0%</td><td>○</td></tr>
<tr><td>P10.23</td><td>Running time of step 10</td><td>0.0s(min)</td><td>○</td></tr>
<tr><td>P10.24</td><td>Multi-step speed 11</td><td>0.0%</td><td>○</td></tr>
<tr><td>P10.25</td><td>Running time of step 11</td><td>0.0s(min)</td><td>○</td></tr>
<tr><td>P10.26</td><td>Multi-step speed 12</td><td>0.0%</td><td>○</td></tr>
<tr><td>P10.27</td><td>Running time of step 12</td><td>0.0s(min)</td><td>○</td></tr>
<tr><td>P10.28</td><td>Multi-step speed 13</td><td>0.0%</td><td>○</td></tr>
<tr><td>P10.29</td><td>Running time of step 13</td><td>0.0s(min)</td><td>○</td></tr>
<tr><td>P10.30</td><td>Multi-step speed 14</td><td>0.0%</td><td>○</td></tr>
<tr><td>P10.31</td><td>Running time of step 14</td><td>0.0s(min)</td><td>○</td></tr>
<tr><td>P10.32</td><td>Multi-step speed 15</td><td>0.0%</td><td>○</td></tr>
<tr><td>P10.33</td><td>Running time of step 15</td><td>0.0s(min)</td><td>○</td></tr>
<tr><td>P10.34</td><td>ACC/DEC time of steps 0–7 of simple PLC</td><td rowspan="2">The description is as follows (St indicates step):
<table>
<tr><th>Code</th><th colspan="2">Binary</th><th>St</th><th>ACC/DEC T1</th><th>ACC/DEC T 2</th><th>ACC/DEC T3</th><th>ACC/DEC T4</th></tr>
<tr><td rowspan="2">P10.34</td><td>BIT1</td><td>BIT0</td><td>0</td><td>00</td><td>01</td><td>10</td><td>11</td></tr>
<tr><td>BIT3</td><td>BIT2</td><td>1</td><td>00</td><td>01</td><td>10</td><td>11</td></tr>
</table></td><td>0x0000</td><td>○</td></tr>
<tr><td>P10.35</td><td>ACC/DEC time of steps 8–15 of simple PLC</td><td>0x0000</td><td>○</td></tr>
</table>

Function code	Name	Description	Default	Modify
		P10.35 BIT5 BIT4 2 00 01 10 11 BIT7 BIT6 3 00 01 10 11 BIT9 BIT8 4 00 01 10 11 BIT11 BIT10 5 00 01 10 11 BIT13 BIT12 6 00 01 10 11 BIT15 BIT14 7 00 01 10 11 BIT1 BIT0 8 00 01 10 11 BIT3 BIT2 9 00 01 10 11 BIT5 BIT4 10 00 01 10 11 BIT7 BIT6 11 00 01 10 11 BIT9 BIT8 12 00 01 10 11 BIT11 BIT10 13 00 01 10 11 BIT13 BIT12 14 00 01 10 11 BIT15 BIT14 15 00 01 10 11 Select corresponding acceleration/deceleration time, and then convert 16-bit binary number into hexadecimal number, finally, and then set corresponding function codes. ACC/DEC time 1 is set by P00.11 and P00.12; ACC/DEC time 2 is set by P08.00 and P08.01; ACC/DEC time 3 is set by P08.02 and P08.03; Acceleration /deceleration time 4 is set by P08.04 and P08.05. Setting range:0x0000–0xFFFF		
P10.36	PLC restart mode	0: Restart from step 0 in multi-step speed running, namely if the VFD stops during running (caused by stop command, fault or power down), it will run from the first step after restart. 1: Continue running from the step frequency when interruption occurred, namely if the VFD stops during running (caused by stop command or fault), it will record the running	0	◎

Function code	Name	Description	Default	Modify
		time of current step, and enters this step automatically after restart, then continue running at the frequency defined by this step in the remaining time.		
P10.37	Multi-step time unit	0: second; the running time of each step is counted in seconds 1: minute; the running time of each step is counted in minutes	0	◎

P11—Protection parameters

Function code	Name	Description	Default	Modify
P11.00	Phase-loss protection	0x000–0x111 Ones place: 0: Disable software input phase loss protection 1: Enable software input phase loss protection Tens place: 0: Disable output phase loss protection 1: Enable output phase loss protection Hundreds place: 0: Disable hardware input phase loss protection 1: Enable hardware input phase loss protection	0x110	○
P11.01	Frequency drop at transient power-off	0: Disable 1: Enable	0	○
P11.02	Dynamic braking in standby state	0: Enable 1: Disable	0	◎
P11.03	Overvoltage stall protection	0: Disable 1: Enable	1	○

Function code	Name	Description	Default	Modify
		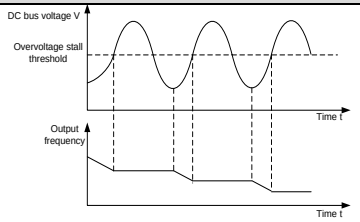		
P11.04	Overvoltage stall protection voltage	120–150% (standard bus voltage) (380V)	136%	○
		120–150% (standard bus voltage) (220V)	120%	
P11.05	Current limit selection	During accelerated running, as the load is too large, the actual acceleration rate of motor is lower than that of output frequency, if no measures are taken, the VFD may trip due to overcurrent during acceleration. 0x00–0x11 Ones place: Current limit action selection 0: Invalid 1: Always valid Tens place: Hardware current limit overload alarm selection 0: Valid 1: Invalid	0x01	◎
P11.06	Automatic current limit level	Current limit protection function detects output current during running, and compares it with the current-limit level defined by P11.06, if it exceeds the current-limit level, the VFD will run at stable frequency during accelerated running, or run in decreased frequency during constant-speed running; if it exceeds the current-limit level continuously, the VFD output frequency will drop continuously until reaching lower limit frequency. When the output current is detected to be lower than the current-limit level again, it will continue accelerated running.	For G type: 160.0% For P type: 120.0%	◎
P11.07	Frequency drop rate during current limit		10.00 Hz/s	◎

Function code	Name	Description	Default	Modify
		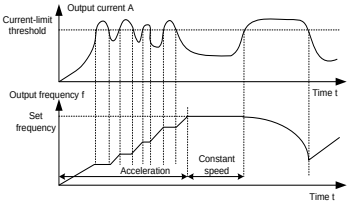 Setting range of P11.06: 50.0–200.0% Setting range of P11.07: 0.00–50.00Hz/s		
P11.08	Pre-alarm selection for VFD/motor OL/UL	0x0000–0x1134 Ones place: 0: Motor overload/underload pre-alarm, relative to rated motor current. 1: VFD overload/underload pre-alarm, relative to rated VFD current. 2: VFD output torque overload/underload pre-alarm, relative to rated motor torque 3: Motor overload/underload pre-alarm. The overload is relative to the motor rated current; while the underload is relative to the motor rated power. 4: VFD overload/underload pre-alarm. The overload is relative to the VFD rated current; while the underload is relative to the VFD rated power. Tens place: 0: The VFD continues running after overload/underload alarm. 1: The VFD continues running after underload alarm, and stops running after overload fault. 2: The VFD continues running after overload alarm, and stops running after underload fault. 3: The VFD stops running after overload/underload fault. Hundreds place: 0: Always detect 1: Detect during constant-speed running Thousands place: VFD overload current	0x0000	○

Function code	Name	Description	Default	Modify
		reference selection 0: Related to current calibration coefficient 1: Irrelated to current calibration coefficient		
P11.09	Overload pre-alarm detection level	If the VFD or motor output current is larger than the overload pre-alarm detection level (P11.09), and the duration exceeds the overload pre-alarm detection time (P11.10), overload pre-alarm signal will be outputted.	G type: 150% P type: 120%	○
P11.10	Overload pre-alarm detection time	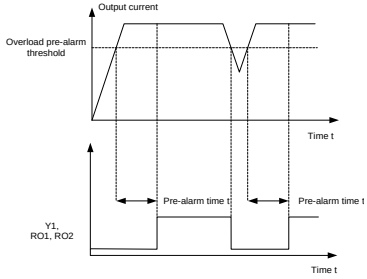 Setting range of P11.09: P11.11–200% Setting range of P11.10: 0.1–3600.0s	1.0s	○
P11.11	Underload pre-alarm detection level	Underload pre-alarm signal will be outputted if the output current of the VFD or motor is lower than underload pre-alarm detection level (P11.11), and the duration exceeds underload pre-alarm detection time (P11.12). Setting range of P11.11: 0–P11.09 Setting range of P11.12: 0.1–3600.0s	50%	○
P11.12	Underload pre-alarm detection time		1.0s	○
P11.13	Fault output terminal action upon fault occurring	Used to set the action of fault output terminals at undervoltage and fault reset. 0x00–0x11 Ones place: 0: Act at undervoltage 1: Do not act at undervoltage Tens place: 0: Act at fault reset 1: Do not act at fault reset	0x00	○
P11.14	Speed deviation detection value	0.0–50.0% Used to set the speed deviation detection value.	10.0%	○

Function code	Name	Description	Default	Modify
P11.15	Speed deviation detection time	0.0–10.0s Used to set the speed deviation detection time. **Note:** Speed deviation protection is invalid when P11.15 is set to 0.0. 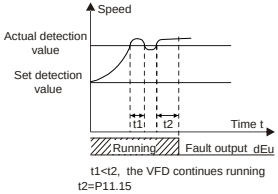 t1<t2, the VFD continues running t2=P11.15 Setting range: 0.0–10.0s	2.0s	○
P11.16	Automatic frequency reduction during voltage drop	0–1 0: Invalid 1: Valid	0	○
P11.17	Proportional coefficient of voltage regulator during undervoltage stall	Used to set the proportional coefficient of the bus voltage regulator during undervoltage stall. Setting range:0–1000	100	○
P11.18	Integral coefficient of voltage regulator during undervoltage stall	Used to set the integral coefficient of the bus voltage regulator during undervoltage stall. Setting range:0–1000	40	○
P11.19	Proportional coefficient of current regulator during undervoltage stall	Used to set the proportional coefficient of the active current regulator during undervoltage stall. Setting range: 0–1000	25	○
P11.20	Integral coefficient of current regulator during undervoltage stall	Used to set the integral coefficient of the active current regulator during undervoltage stall. Setting range: 0–2000	150	○
P11.21	Proportional coefficient of voltage regulator during overvoltage stall	Used to set the proportional coefficient of the bus voltage regulator during overvoltage stall. Setting range: 0–1000	60	○

Function code	Name	Description	Default	Modify
P11.22	Integral coefficient of voltage regulator during overvoltage stall	Used to set the integral coefficient of the bus voltage regulator during overvoltage stall. Setting range: 0–1000	10	○
P11.23	Proportional coefficient of current regulator during overvoltage stall	Used to set the proportional coefficient of the active current regulator during overvoltage stall. Setting range: 0–1000	60	○
P11.24	Integral coefficient of current regulator during overvoltage stall	Used to set the integral coefficient of the active current regulator during overvoltage stall. Setting range: 0–2000	250	○
P11.25	Enabling VFD overload integral	0: Disable 1: Enable When the function code is set to 0, the overload timing value is reset to zero after the VFD is stopped. In this case, the determination of VFD overload takes more time, and therefore the effective protection over the VFD is weakened. When the function code is set to 1, the overload timing value is not reset, and the overload timing value is accumulative. In this case, the determination of VFD overload takes less time, and therefore the protection over the VFD can be performed more quickly.	0	◎
P11.26	Reserved			
P11.27	VF vibration control method	0x00–0x11 Ones place: 0: Method 1 1: Method 2 Tens place: 0: Reserved 1: Reserved	0x00	◎
P11.28	SPO detection start delay time	0.0–60.0s **Note:** The SPO detection is started only after	5.0s	○

Function code	Name	Description	Default	Modify
		the VFD runs for the delay time specified by P11.28 to advoid false alarms caused by the unstable frequency.		
P11.29	SPO unbalance factor	0–10	6	○
P11.30	Reserved			
P11.31	Fault severity group 1	0x0000–0x3333 Thousands place/Hundreds place/Tens place/Ones place: 0: Report the fault 1: Report the fault after deceleration to stop 2: Pre-alarm, with the action executed according to P11.51 3: Screen out the fault **Note**: Different fault actions are taken for different fault severities. The first 10 faults are not grouped by severity, but each four of the subsequent faults are grouped by severity in ascending order from right to left in hexadecimal format, that is, from the ones place to the thousands place (for example, the ones place of fault severity group 1 corresponds to fault 11). Group 1: Faults 11–14 (OL1, OL2, SPI, SPO) Group 2: Faults 15–18 (OH1, OH2, EF, CE) Group 3: Faults 19–22 (ItE, tE, EEP, PIDE) Group 4: Faults 23–26 (bCE, END, OL3, PCE) Group 5: Faults 27–30 (UPE, DNE, E-DP, E-NET) Group 6: Faults 31–34 (E-CAN, ETH1, ETH2, dEu) Group 7: Faults 35–38 (STo, LL, ENC1o, ENC1d) Group 8: Faults 39–42 (ENC1Z, STO, STL1, STL2) Group 9: Faults 43–46 (STL3, CrCE, P-E1,	0x0000	○
P11.32	Fault severity group 2		0x0000	○
P11.33	Fault severity group 3		0x0000	○
P11.34	Fault severity group 4		0x0000	○
P11.35	Fault severity group 5		0x0000	○
P11.36	Fault severity group 6		0x0000	○
P11.37	Fault severity group 7		0x0000	○
P11.38	Fault severity group 8		0x0000	○
P11.39	Fault severity group 9		0x0000	○
P11.40	Fault severity group 10		0x0000	○
P11.41	Fault severity group 11		0x0000	○
P11.42	Fault severity group 12		0x0000	○
P11.43	Fault severity group 13		0x0000	○
P11.44	Fault severity group 14		0x0000	○
P11.45	Fault severity group 15		0x0000	○
P11.46	Fault severity group		0x0000	○

Function code	Name	Description	Default	Modify
	16	P-E2)		
P11.47	Fault severity group 17	Group 10: Faults 47–50 (P-E3, P-E4, P-E5, P-E6)	0x0000	○
P11.48	Fault severity group 18	Group 11: Faults 51–54 (P-E7, P-E8, P-E9, P-E10)	0x0000	○
P11.49	Fault severity group 19	Group 12: Faults 55–58 (E-Err, ENCU, E-PN, SECAN)	0x0000	○
P11.50	Fault severity group 20	Group 13: Faults 59–62 (OT, F1-Er, F2-Er, F3-Er) Group 14: Faults 63–66 (C1-Er, C2-Er, C3-Er, E-CAT) Group 15: Faults 67–70 (E-BAC, E-DEV, S-Err, OtE1) Group 16: Faults 71–75 (OtE2, E-EIP, E-PAO, E-AI1) Group 17: Faults 75–78 (E-AI2, E-AI3, Reserved, Reserved) Group 18: Faults 79–82 (Reserved, Reserved, Reserved, Reserved) Group 19: Faults 83–86 (Reserved, Reserved, Reserved, Reserved) Group 20: Faults 87–90 (Reserved, Reserved, Reserved, Reserved)	0x0000	○
P11.51	Action for fault pre-alarm	0–4 0: Run at the set frequency 1: Run at the output frequency at the time of fault 2: Run at the frequency upper limit 3: Run at the frequency lower limit 4: Run at the frequency reserved for exception	0	○
P11.52	Frequency reserved for exception	0.00–630.00Hz	0.00Hz	○
P11.53	Fire mode function	0–2 0: Invalid 1: Fire mode 1 2: Fire mode 2 When P11.53=0, the fire mode is invalid, and	0	◎

Function code	Name	Description	Default	Modify
		the normal running mode is used. In this case, the VFD stops when encountering a fault. When the fire mode function is valid, the VFD runs at the speed specified by P11.54. When fire mode 1 is selected, the VFD always runs except when the VFD has been damaged. When fire mode 2 is selected, the VFD always runs, but the VFD stops when encountering OUT1, OUT2, OUT3, OC1, OC2, OC3, OV1, OV2, OV3, or SPO. **Note:** Terminal control must be used for a fire mode. When the fire mode has lasted 5 minutes, it is reset, and no warranty of repair is processed.		
P11.54	Running frequency in fire mode	0.00Hz–P00.03 (Max. output frequency)	50.00Hz	○
P11.55	Fire mode flag	0–1 **Note:** When the fire mode has lasted 5 minutes, it is reset, and no warranty of repair is processed.	0	●
P11.56–P11.69	Reserved			

P12—Parameters of motor 2

Function code	Name	Description	Default	Modify
P12.00	Type of motor 2	0: Asynchronous motor (AM) 1: Synchronous motor (SM)	0	◎
P12.01	Rated power of AM 2	0.1–3000.0kW	Model depended	◎
P12.02	Rated frequency of AM 2	0.01Hz–P00.03 (Max. output frequency)	50.00Hz	◎
P12.03	Rated speed of AM 2	1–60000rpm	Model depended	◎
P12.04	Rated voltage of AM 2	0–1200V	Model depended	◎

Function code	Name	Description	Default	Modify
P12.05	Rated current of AM 2	0.8–6000.0A	Model depended	◎
P12.06	Stator resistance of AM 2	0.001–65.535Ω	Model depended	○
P12.07	Rotor resistance of AM 2	0.001–65.535Ω	Model depended	○
P12.08	Leakage inductance of AM 2	0.1–6553.5mH	Model depended	○
P12.09	Mutual inductance of AM 2	0.1–6553.5mH	Model depended	○
P12.10	No-load current of AM 2	0.1–6553.5A	Model depended	○
P12.11	Magnetic saturation coefficient 1 of iron core of AM 2	0.0–100.0%	80%	○
P12.12	Magnetic saturation coefficient 2 of iron core of AM 2	0.0–100.0%	68%	○
P12.13	Magnetic saturation coefficient 3 of iron core of AM 2	0.0–100.0%	57%	○
P12.14	Magnetic saturation coefficient 4 of iron core of AM 2	0.0–100.0%	40%	○
P12.15	Rated power of SM 2	0.1–3000.0kW	Model depended	◎
P12.16	Rated frequency of SM 2	0.01Hz–P00.03 (Max. output frequency)	50.00Hz	◎
P12.17	Number of pole pairs of SM 2	1–128	2	◎
P12.18	Rated voltage of SM 2	0–1200V	Model depended	◎
P12.19	Rated current of SM 2	0.8–6000.0A	Model depended	◎
P12.20	Stator resistance of SM 2	0.001–65.535Ω	Model depended	○
P12.21	Direct-axis	0.01–655.35mH	Model	○

Function code	Name	Description	Default	Modify
	inductance of SM 2		depended	
P12.22	Quadrature-axis inductance of SM 2	0.01–655.35mH	Model depended	○
P12.23	Counter-emf constant of SM 2	0–10000V	300V	○
P12.24	Initial pole position of SM 2	0x0000–0xFFFF	0x0000	●
P12.25	Identification current of SM 2	0%–50% (rated motor current)	10%	●
P12.26	Overload protection selection of motor 2	0: No protection 1: Common motor protection (with low-speed compensation). 2: Variable-frequency motor protection (without low speed compensation).	2	◎
P12.27	Overload protection coefficient of motor 2	Motor overload multiples M=Iout/(In*K) In is rated motor current, Iout is VFD output current, and K is motor overload protection coefficient. A smaller value of K indicates a bigger value of M. When M=116%, protection is performed after motor overload lasts for 1 hour; when M=150%, protection is performed after motor overload lasts for 12 minutes; when M=180%, protection is performed after motor overload lasts for 5 minutes; when M=200%, protection is performed after motor overload lasts for 60 seconds; and when M≥400%, protection is performed immediately. 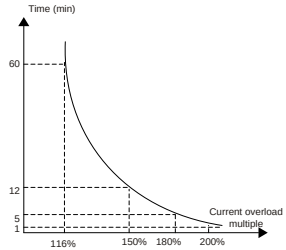 	100.0%	○

Function code	Name	Description	Default	Modify
		Setting range: 20.0% –120.0%		
P12.28	Power display calibration coefficient of motor 2	0.00–3.00	1.00	○
P12.29	Parameter display selection of motor 2	0: Display by motor type. In this mode, only parameters related to the present motor type are displayed. 1: Display all. In this mode, all the motor parameters are displayed.	0	○
P12.30	System inertia of motor 2	0–30.000kgm^2	0.000 kgm^2	○
P12.31–P12.32	Reserved			

P13—Control parameters of synchronous motor

Function code	Name	Description	Default value	Modify
P13.00	SM injection current drop rate	Used to set the reduction rate of the injection reactive current. When the active current of the SM increases to some extent, the injection reactive current can be reduced to improve the power factor of the motor. Setting range: 0.0%–100.0% (of the motor rated current)	80.0%	○
P13.01	Initial pole detection method	0: Invalid 1: Pulse detection method 2: Pulse detection method	0	◎
P13.02	Pull-in current 1	Pull-in current is the pole positioning current. Pull-in current 1 is valid within the lower limit of pull-in current switchover frequency threshold. If you need to increase the starting torque, increase the value of the function code properly. Setting range: 0.0%–100.0% (of the motor rated current)	20.0%	○

Function code	Name	Description	Default value	Modify
P13.03	Pull-in current 2	Pull-in current is the pole positioning current. Pull-in current 2 is valid within the upper limit of pull-in current switchover frequency threshold. Generally, you do not need to modify the function code. Setting range: 0.0%–100.0% (of the motor rated current)	10.0%	○
P13.04	Pull-in current switchover frequency	0.0%–200.0% (of the motor rated current)	20.0%	○
P13.05	High-frequency superposition frequency	200Hz–1000Hz	500	◎
P13.06	Pulse current setting	Used to set the pulse current threshold when the initial magnetic pole position is detected by means of pulse. The value is a percentage in relative to the rated current of the motor. Setting range: 0.0–300.0% (of the motor rated voltage)	100.0%	◎
P13.07	Control parameter 0	0.0–400.0	0.0	○
P13.08	Control parameter 1	0x0000–0xFFFF	0x0000	○
P13.09	Frequency threshold of phase-lock loop switch-in	This parameter is used to set the frequency threshold for enabling the counter-electromotive force phase-locked loop in SVC 0. When the running frequency is lower than the value of this parameter, the phase-locked loop is disabled; and when the running frequency is higher than that, the phase-locked loop is enabled. Setting range: 0.00–655.35	50.00	○
P13.10	Initial compensation angle of SM	0.0–359.9	0.0	○
P13.11	Maladjustment detection time	Used to adjust the responsiveness of anti-maladjustment function. If the load inertia	0.5s	○

Function code	Name	Description	Default value	Modify
		is large, increase the value of the function code properly, however, the responsiveness may slow down accordingly. Setting range: 0.0–10.0s		
P13.12	High-frequency compensation coefficient of SM	The function code is valid when the motor speed exceeds the rated speed. If motor oscillation occurred, adjust the function code properly. Setting range: 0.0–100.0%	0.0%	○
P13.13	High-frequency injection current	0–300.0%	20.0%	◎

P14—Serial communication function

Function code	Name	Description	Default value	Modify
P14.00	Local communication address	Setting range: 1–247 When the master writes the slave communication address to 0 indicating a broadcast address in a frame, all the salves on the Modbus/Modbus TCP bus receive the frame but do not respond to it. Local communication address is unique in the communication network, which is the basis for point-to-point communication between the upper computer and the VFD. **Note:** The communication address of a slave cannot be set to 0.	1	○
P14.01	Communication baud rate	Used to set the data transmission speed between upper computer and the VFD. 0: 1200BPS 1: 2400BPS 2: 4800BPS 3: 9600BPS 4: 19200BPS 5: 38400BPS 6: 57600BPS 7: 115200BPS **Note:** The baud rate set on the VFD must be	4	○

Function code	Name	Description	Default value	Modify
		consistent with that on the upper computer. Otherwise, the communication fails. A greater baud rate indicates faster communication.		
P14.02	Data bit check	The data format set on the VFD must be consistent with that on the upper computer. Otherwise, the communication fails. 0: No check (N, 8, 1) for RTU 1: Even check (E, 8, 1) for RTU 2: Odd check (O, 8, 1) for RTU 3: No check (N, 8, 2) for RTU 4: Even check (E, 8, 2) for RTU 5: Odd check (O, 8, 2) for RTU	1	○
P14.03	Communication response delay	0–200ms The parameter indicates the communication response delay, that is, the interval from when the VFD completes receiving data to when it sends response data to the upper computer. If the response delay is shorter than the VFD processing time, the VFD sends response data to the upper computer after processing data. If the delay is longer than the VFD processing time, the VFD does not send response data to the upper computer until the delay is reached although data has been processed.	5ms	○
P14.04	RS485 communication timeout period	0.0 (invalid)–60.0s When this parameter is set to 0.0, the communication timeout time is invalid. When it is set a non-zero value, the VFD reports the "Modbus/Modbus TCP communication fault" (CE) if the communication interval exceeds the value. In general, this parameter is set to 0.0. When continuous communication is required, you can set the function code to monitor communication status.	0.0s	○
P14.05	Transmission error processing	0: Report an alarm and coast to stop 1: Keep running without reporting an alarm	0	○

Function code	Name	Description	Default value	Modify
		2: Stop in enabled stop mode without reporting an alarm (applicable only to communication mode) 3: Stop in enabled stop mode without reporting an alarm (applicable to any mode)		
P14.06	Modbus communication processing action	0x000–0x111 Ones: 0: Write operation has response 1: Write operation has no response Tens: 0: Communication password protection is invalid 1: Communication password protection is valid Hundreds place: Valid only for RS485 communication 0: User-defined addresses specified by P14.07 and P14.08 are invalid 1: User-defined addresses specified by P14.07 and P14.08 are valid	0x000	○
P14.07	User-defined running command address	0x0000–0xFFFF	0x2000	○
P14.08	User-defined frequency setting address	0x0000–0xFFFF	0x2001	○
P14.09	Modbus TCP communication timeout time	0.0–60.0s	5.0s	○
P14.10	Enabling program upgrade through RS485	0–1 0: Disable 1: Enable	0	◎
P14.11	Bootloader software version	0.00–655.35	0.00	●
P14.12	Displaying no upgrade bootloader fault	0–1 0: Display 1: Do not display	0	○

Function code	Name	Description	Default value	Modify
P14.13–P14.47	Reserved	/	/	/
P14.48	Channel selection for mapping between PZDs and function codes	0x00–0x12 Ones place: Channel for mapping function codes to PZDs 0: Reserved 1: Group P15 2: Group P16 Tens place: Save function at power failure 0: Disable 1: Enable	0x12	○
P14.49	Mapped function code of received PZD2	0x0000–0xFFFF	0x0000	○
P14.50	Mapped function code of received PZD3	0x0000–0xFFFF	0x0000	○
P14.51	Mapped function code of received PZD4	0x0000–0xFFFF	0x0000	○
P14.52	Mapped function code of received PZD5	0x0000–0xFFFF	0x0000	○
P14.53	Mapped function code of received PZD6	0x0000–0xFFFF	0x0000	○
P14.54	Mapped function code of received PZD7	0x0000–0xFFFF	0x0000	○
P14.55	Mapped function code of received PZD8	0x0000–0xFFFF	0x0000	○
P14.56	Mapped function code of received PZD9	0x0000–0xFFFF	0x0000	○
P14.57	Mapped function code of received	0x0000–0xFFFF	0x0000	○

Function code	Name	Description	Default value	Modify
	PZD10			
P14.58	Mapped function code of received PZD11	0x0000–0xFFFF	0x0000	○
P14.59	Mapped function code of received PZD12	0x0000–0xFFFF	0x0000	○
P14.60	Mapped function code of sent PZD2	0x0000–0xFFFF	0x0000	○
P14.61	Mapped function code of sent PZD3	0x0000–0xFFFF	0x0000	○
P14.62	Mapped function code of sent PZD4	0x0000–0xFFFF	0x0000	○
P14.63	Mapped function code of sent PZD5	0x0000–0xFFFF	0x0000	○
P14.64	Mapped function code of sent PZD6	0x0000–0xFFFF	0x0000	○
P14.65	Mapped function code of sent PZD7	0x0000–0xFFFF	0x0000	○
P14.66	Mapped function code of sent PZD8	0x0000–0xFFFF	0x0000	○
P14.67	Mapped function code of sent PZD9	0x0000–0xFFFF	0x0000	○
P14.68	Mapped function code of sent PZD10	0x0000–0xFFFF	0x0000	○
P14.69	Mapped function code of sent PZD11	0x0000–0xFFFF	0x0000	○
P14.70	Mapped function code of sent PZD12	0x0000–0xFFFF	0x0000	○

P15—Functions of communication expansion card 1

Function code	Name	Description	Default value	Modify
P15.00	Reserved			
P15.01	Module address	0–127	2	◎

Function code	Name	Description	Default value	Modify
P15.02	Received PZD2	0–31 0: Invalid 1: Set frequency (0–Fmax. Unit: 0.01Hz) 2: PID reference (-1000–1000, in which 1000 corresponds to 100.0%) 3: PID feedback (-1000–1000, in which 1000 corresponds to 100.0%) 4: Torque setting (-3000–+3000, in which 1000 corresponds to 100.0% of the motor rated current) 5: Setting of the upper limit of forward running frequency (0–Fmax. Unit: 0.01 Hz) 6: Setting of the upper limit of reverse running frequency (0–Fmax. Unit: 0.01 Hz) 7: Upper limit of electromotive torque (0–3000, in which 1000 corresponds to 100.0% of the motor rated current) 8: Upper limit of braking torque (0–3000, in which 1000 corresponds to 100% of the motor rated current) 9: Virtual input terminal command (Range: 0x000–0x3FF, corresponding to S8/S7/S6/S5/HDIB/HDIA/S4/S3/S2/S1) 10: Virtual output terminal command (Range: 0x00–0x0F, corresponding to RO2/RO1/HDO/Y1) 11: Voltage setting (special for V/F separation) (0–1000, in which 1000 corresponds to 100% of the motor rated voltage) 12: AO1 output setting 1 (-1000–+1000, in which 1000 corresponds to 100.0%) 13: AO2 output setting 2 (-1000–1000, in which 1000 corresponds to 100.0%) 14: High-order bit of position reference (signed) 15: Low-order bit of position reference (unsigned) 16: High-order bit of position feedback	0	○
P15.03	Received PZD3		0	○
P15.04	Received PZD4		0	○
P15.05	Received PZD5		0	○
P15.06	Received PZD6		0	○
P15.07	Received PZD7		0	○
P15.08	Received PZD8		0	○
P15.09	Received PZD9		0	○
P15.10	Received PZD10		0	○
P15.11	Received PZD11		0	○
P15.12	Received PZD12		0	○

Function code	Name	Description	Default value	Modify
		(signed) 17: Low-order bit of position feedback (unsigned) 18: Position feedback setting flag (position feedback can be set only after this flag is set to 1 and then to 0) 19: Function parameter mapping (PZD2–PZD12 correspond to P14.49–P14.59) 20–31: Reserved		
P15.13	Sent PZD2	0–31 0: Invalid 1: Running frequency (x100, Hz) 2: Set frequency (x100, Hz) 3: Bus voltage (x10, V) 4: Output voltage (x1, V) 5: Output current (x10, A) 6: Actual output torque (x10, %) 7: Actual output power (x10, %) 8: Rotation speed of running (x1, rpm) 9: Linear speed of running (x1, m/s) 10: Ramp reference frequency 11: Fault code 12: AI1 input (x100, V) 13: AI2 input (x100, V) 14: AI3 input (x100, V) 15: HDIA frequency value (x1000, kHz) 16: Terminal input status 17: Terminal output status 18: PID reference (x10, %) 19: PID feedback (x10, %) 20: Motor rated torque 21: High-order bit of position reference (signed) 22: Low-order bit of position reference (unsigned) 23: High-order bit of position feedback (signed)	0	○
P15.14	Sent PZD3		0	○
P15.15	Sent PZD4		0	○
P15.16	Sent PZD5		0	○
P15.17	Sent PZD6		0	○
P15.18	Sent PZD7		0	○
P15.19	Sent PZD8		0	○
P15.20	Sent PZD9		0	○
P15.21	Sent PZD10		0	○
P15.22	Sent PZD11		0	○
P15.23	Sent PZD12		0	○

Function code	Name	Description	Default value	Modify
		24: Low-order bit of position feedback (unsigned) 25: Status word 26: HDIB frequency value (x1000, kHz) 27: High-order bit of PG card pulse feedback 28: Low-order bit of PG card pulse feedback 29: High-order bit of PG card pulse reference 30: Low-order bit of PG card pulse reference 31: Function parameter mapping (PZD2–PZD12 correspond to P14.60–P14.70)		
P15.24	Reserved			
P15.25	DP communication timeout time	0.0 (invalid)–60.0s	5.0s	○
P15.26	CANopen communication timeout time	0.0 (invalid)–60.0s	5.0s	○
P15.27	CANopen communication baud rate	0–7 0: 1000kbps 1: 800kbps 2: 500kbps 3: 250kbps 4: 125kbps 5: 100kbps 6: 50kbps 7: 20kbps	3	◎
P15.28	Master/slave CAN communication address	0–127	1	◎
P15.29	Master/slave CAN communication baud rate selection	0: 50Kbps 1: 100 Kbps 2: 125Kbps 3: 250Kbps 4: 500Kbps 5: 1M bps	2	◎

Function code	Name	Description	Default value	Modify
P15.30	Master/slave CAN communication timeout time	0.0 (invalid)–60.0s	5.0s	○
P15.31–P15.42	Reserved			
P15.43	Communication control word expression format	0–1 0: Decimal format 1: Binary format	0	◎

P16—Functions of communication expansion card 2

Function code	Name	Description	Default value	Modify
P16.00–P16.01	Reserved			
P16.02	Ethernet monitoring card IP address 1	0–255	192	◎
P16.03	Ethernet monitoring card IP address 2	0–255	168	◎
P16.04	Ethernet monitoring card IP address 3	0–255	0	◎
P16.05	Ethernet monitoring card IP address 4	0–255	1	◎
P16.06	Ethernet monitoring card subnet mask 1	0–255	255	◎
P16.07	Ethernet monitoring card subnet mask 2	0–255	255	◎
P16.08	Ethernet monitoring card subnet mask 3	0–255	255	◎
P16.09	Ethernet monitoring card subnet mask 4	0–255	0	◎
P16.10	Ethernet monitoring card gateway 1	0–255	192	◎
P16.11	Ethernet monitoring card gateway 2	0–255	168	◎
P16.12	Ethernet monitoring card gateway 3	0–255	0	◎

Function code	Name	Description	Default value	Modify
P16.13	Ethernet monitoring card gateway 4	0–255	1	◎
P16.14	Ethernet monitoring variable address 1	0x0000–0xFFFF	0x0000	○
P16.15	Ethernet monitoring variable address 2	0x0000–0xFFFF	0x0000	○
P16.16	Ethernet monitoring variable address 3	0x0000–0xFFFF	0x0000	○
P16.17	Ethernet monitoring variable address 4	0x0000–0xFFFF	0x0000	○
P16.18–P16.23	Reserved			
P16.24	Identification time for the expansion card in card slot 1	0.0–600.0s If it is set to 0.0, identification fault will not be detected.	0.0s	○
P16.25	Identification time for the expansion card in card slot 2	0.0–600.0s If it is set to 0.0, offline fault will not be detected.	0.0s	○
P16.26	Identification time for the expansion card in card slot 3	0.0–600.0s If it is set to 0.0, offline fault will not be detected.	0.0s	○
P16.27	Communication timeout period of expansion card in card slot 1	0.0–600.0s If it is set to 0.0, offline fault will not be detected.	0.0s	○
P16.28	Communication timeout period of expansion card in card slot 2	0.0–600.0s If it is set to 0.0, offline fault will not be detected.	0.0s	○
P16.29	Communication timeout period of expansion card in card slot 3	0.0–600.0s If it is set to 0.0, offline fault will not be detected.	0.0s	○
P16.30	Reserved			
P16.31	PROFINET communication timeout time	0.0–60.0s	5.0s	○

Function code	Name	Description	Default value	Modify
P16.32	Received PZD2	0–31 0: Invalid 1: Set frequency (0–Fmax. Unit: 0.01Hz) 2: PID reference (-1000–1000, in which 1000 corresponds to 100.0%) 3: PID feedback (-1000–1000, in which 1000 corresponds to 100.0%) 4: Torque setting (-3000–+3000, in which 1000 corresponds to 100.0% of the motor rated current) 5: Setting of the upper limit of forward running frequency (0–Fmax. Unit: 0.01 Hz) 6: Setting of the upper limit of reverse running frequency (0–Fmax. Unit: 0.01 Hz) 7: Upper limit of electromotive torque (0–3000, in which 1000 corresponds to 100.0% of the motor rated current) 8: Upper limit of braking torque (0–3000, in which 1000 corresponds to 100% of the motor rated current) 9: Virtual input terminal command (Range: 0x000–0x3FF, corresponding to S8/S7/S6/S5/HDIB/HDIA/S4/S3/S2/S1) 10: Virtual output terminal command (Range: 0x00–0x0F, corresponding to RO2/RO1/HDO/Y1) 11: Voltage setting (special for V/F separation) (0–1000, in which 1000 corresponds to 100% of the motor rated voltage) 12: AO1 output setting 1 (-1000–+1000, in which 1000 corresponds to 100.0%) 13: AO2 output setting 2 (-1000–1000, in which 1000 corresponds to 100.0%) 14: High-order bit of position reference (signed) 15: Low-order bit of position reference (unsigned) 16: High-order bit of position feedback	0	○
P16.33	Received PZD3		0	○
P16.34	Received PZD4		0	○
P16.35	Received PZD5		0	○
P16.36	Received PZD6		0	○
P16.37	Received PZD7		0	○
P16.38	Received PZD8		0	○
P16.39	Received PZD9		0	○
P16.40	Received PZD10		0	○
P16.41	Received PZD11		0	○
P16.42	Received PZD12		0	○

Function code	Name	Description	Default value	Modify
		(signed) 17: Low-order bit of position feedback (unsigned) 18: Position feedback setting flag (position feedback can be set only after this flag is set to 1 and then to 0) 19: Function parameter mapping (PZD2–PZD12 correspond to P14.49–P14.59) 20–31: Reserved		
P16.43	Sent PZD2	0–31 0: Invalid 1: Running frequency (x100, Hz) 2: Set frequency (x100, Hz) 3: Bus voltage (x10, V) 4: Output voltage (x1, V) 5: Output current (x10, A) 6: Actual output torque (x10, %) 7: Actual output power (x10, %) 8: Rotation speed of running (x1, rpm) 9: Linear speed of running (x1, m/s) 10: Ramp reference frequency 11: Fault code 12: AI1 input (x100, V) 13: AI2 input (x100, V) 14: AI3 input (x100, V) 15: HDIA frequency value (x1000, kHz) 16: Terminal input status 17: Terminal output status 18: PID reference (x10, %) 19: PID feedback (x10, %) 20: Motor rated torque 21: High-order bit of position reference (signed) 22: Low-order bit of position reference (unsigned) 23: High-order bit of position feedback (signed)	0	○
P16.44	Sent PZD3		0	○
P16.45	Sent PZD4		0	○
P16.46	Sent PZD5		0	○
P16.47	Sent PZD6		0	○
P16.48	Sent PZD7		0	○
P16.49	Sent PZD8		0	○
P16.50	Sent PZD9		0	○
P16.51	Sent PZD10		0	○
P16.52	Sent PZD11		0	○
P16.53	Sent PZD12		0	○

Function code	Name	Description	Default value	Modify
		24: Low-order bit of position feedback (unsigned) 25: Status word 26: HDIB frequency value (x1000, kHz) 27: High-order bit of PG card pulse feedback 28: Low-order bit of PG card pulse feedback 29: High-order bit of PG card pulse reference 30: Low-order bit of PG card pulse reference 31: Function parameter mapping (PZD2–PZD12 correspond to P14.60–P14.70)		
P16.54	Ethernet IPcommunication timeout time	0.0–60.0s	5.0s	○
P16.55	Ethernet IP communication rate	0–4 0: Self-adaptive 1: 100M full-duplex 2: 100M half-duplex 3: 10M full-duplex 4: 10M half-duplex	0	◎
P16.56	Bluetooth pairing code	0–65535	0	●
P16.57	Bluetooth host type	0–65535 0: No host connection 1: Mobile APP 2: Bluetooth box 3–65535: Reserved	0	●
P16.58	Industrial Ethernet communication card IP address 1	0–255	192	◎
P16.59	Industrial Ethernet communication card IP address 2	0–255	168	◎
P16.60	Industrial Ethernet communication card IP address 3	0–255	0	◎
P16.61	Industrial Ethernet	0–255	20	◎

Function code	Name	Description	Default value	Modify
	communication card IP address 4			
P16.62	Industrial Ethernet communication card subnet mask 1	0–255	255	◎
P16.63	Industrial Ethernet communication card subnet mask 2	0–255	255	◎
P16.64	Industrial Ethernet communication card subnet mask 3	0–255	255	◎
P16.65	Industrial Ethernet communication card subnet mask 4	0–255	0	◎
P16.66	Industrial Ethernet communication card gateway 1	0–255	192	◎
P16.67	Industrial Ethernet communication card gateway 2	0–255	168	◎
P16.68	Industrial Ethernet communication card gateway 3	0–255	0	◎
P16.69	Industrial Ethernet communication card gateway 4	0–255	1	◎

P17—Status viewing

Function code	Name	Description	Default value	Modify
P17.00	Set frequency	Displays current set frequency of the VFD. Range: 0.00Hz–P00.03	0.00Hz	●
P17.01	Output frequency	Displays current output frequency of the VFD. Range: 0.00Hz–P00.03	0.00Hz	●
P17.02	Ramp reference frequency	Displays current ramp reference frequency of the VFD. Range: 0.00Hz–P00.03	0.00Hz	●

Function code	Name	Description	Default value	Modify
P17.03	Output voltage	Displays current output voltage of the VFD. Range: 0–1200V	0V	●
P17.04	Output current	Displays the valid value of current output current of the VFD. Range: 0.0–5000.0A	0.0A	●
P17.05	Motor speed	Displays current motor speed. Range: 0–65535rpm	0 rpm	●
P17.06	Torque current	Displays current torque current of the VFD. Range: -3000.0–3000.0A	0.0A	●
P17.07	Exciting current	Displays current exciting current of the VFD. Range: -3000.0–3000.0A	0.0A	●
P17.08	Motor power	Displays current motor power; 100% relative to rated motor power, positive value is motoring state, negative value is generating state. Range: -300.0–300.0% (relative to rated motor power)	0.0%	●
P17.09	Motor output torque	Displays current output torque of the VFD; 100% relative to rated motor torque, during forward running, positive value is motoring state, negative value is generating state, during reverse running, positive value is generating state, negative value is motoring state. Range: -250.0–250.0%	0.0%	●
P17.10	Estimated motor frequency	Displays the estimated motor rotor frequency under open-loop vector condition. Range: 0.00–P00.03	0.00Hz	●
P17.11	DC bus voltage	Displays current DC bus voltage of the VFD. Range: 0.0–2000.0V	0.0V	●
P17.12	Digital input terminal state	Displays current digital input terminal state of the VFD. Bit0: S1 Bit1: S2 Bit2: S3 Bit3: S4 Bit4: HDIA	0x00	●

Function code	Name	Description	Default value	Modify
		Bit5: HDIB Range: 0x00–0x3F		
P17.13	Digital output terminal state	Displays current digital output terminal state of the VFD. 0x00–0x0F Bit0: Y1 Bit1: HDO Bit2: RO1 Bit3: RO2	0x00	●
P17.14	Digital adjustment value	Displays the regulating variable of UP/DOWN. Range: 0.00Hz–P00.03	0.00Hz	●
P17.15	Torque reference value	Relative to percentage of the rated torque of current motor, display torque reference. Range: -300.0%–300.0% (motor rated current)	0.0%	●
P17.16	Linear speed	0–65535	0	●
P17.17	Reserved			
P17.18	Counting value	0–65535	0	●
P17.19	AI1 input voltage	Displays input signal of AI1 Range: 0.00–10.00V	0.00V	●
P17.20	AI2 input voltage	Displays input signal of AI2 Range: -10.00V–10.00V	0.00V	●
P17.21	HDIA input frequency	Displays input frequency of HDIA Range: 0.000–50.000kHz	0.000 kHz	●
P17.22	HDIB input frequency	Displays input frequency of HDIB Range: 0.000–50.000kHz	0.000 kHz	●
P17.23	PID reference value	Displays PID reference value Range: -100.0–100.0%	0.0%	●
P17.24	PID feedback value	Displays PID feedback value Range: -100.0–100.0%	0.0%	●
P17.25	Motor power factor	Displays the power factor of current motor. Range: -1.00–1.00	0.00	●
P17.26	Time elapsed of this	Displays the time elapsed of this run.	0min	●

Function code	Name	Description	Default value	Modify
	run	Range: 0–65535min		
P17.27	Simple PLC and current step number of multi-step speed	Displays simple PLC and current step number of multi-step speed Range: 0–15	0	●
P17.28	Motor ASR controller output	Displays the speed loop ASR controller output value under vector control mode, relative to the percentage of rated torque of the motor. Range: -300.0%–300.0% (of the rated motor current)	0.0%	●
P17.29	Pole angle of open-loop SM	Displays initial identification angle of SM Range: 0.0–360.0	0.0	●
P17.30	Phase compensation of SM	Displays phase compensation of SM Range: -180.0–180.0	0.0	●
P17.31	High-frequency superposition current of SM	0.0%–200.0% (of the rated motor current)	0.0%	●
P17.32	Motor flux linkage	0.0%–200.0%	0.0%	●
P17.33	Exciting current reference	Displays the exciting current reference value under vector control mode Range: -3000.0–3000.0A	0.0A	●
P17.34	Torque current reference	Displays torque current reference value under vector control mode Range: -3000.0–3000.0A	0.0A	●
P17.35	AC incoming current	Displays the valid value of incoming current on AC side Range: 0.0–5000.0A	0.0A	●
P17.36	Output torque	Displays output torque value, during forward running, positive value is motoring state, negative value is generating state; during reverse running, positive value is generating state, negative value is motoring state. Range: -3000.0Nm–3000.0Nm	0.0Nm	●
P17.37	Motor overload count value	0–65535	0	●
P17.38	Process PID output	-100.0%–100.0%	0.0%	●

Function code	Name	Description	Default value	Modify
P17.39	Function code in parameter download error	0.00–99.00	0.00	●
P17.40	Motor control mode	0x000–0x123 Ones place: Control mode 0: Vector control 0 1: Vector control 1 2: Space voltage vector control 3: Closed-loop vector control Tens place: Control status 0: Speed control 1: Torque control 2: Position control Hundreds place: Motor number 0: Motor 1 1: Motor 2	0x000	●
P17.41	Electromotive torque upper limit	0.0%–300.0% (of the motor rated current)	0.0%	●
P17.42	Braking torque upper limit	0.0%–300.0% (of the motor rated current)	0.0%	●
P17.43	Forward rotation upper-limit frequency in torque control	0.00Hz–P00.03	0.00Hz	●
P17.44	Reverse rotation upper-limit frequency in torque control	0.00Hz–P00.03	0.00Hz	●
P17.45	Inertia compensation torque	-100.0%–100.0%	0.0%	●
P17.46	Friction compensation torque	-100.0%–100.0%	0.0%	●
P17.47	Motor pole pairs	0–65535	0	●
P17.48	VFD overload count value	0–65535	0	●

Function code	Name	Description	Default value	Modify
P17.49	Frequency set by A source	0.00Hz–P00.03	0.00Hz	●
P17.50	Frequency set by B source	0.00Hz–P00.03	0.00Hz	●
P17.51	PID proportional output	-100.0%–100.0%	0.0%	●
P17.52	PID integral output	-100.0%–100.0%	0.0%	●
P17.53	PID differential output	-100.0%–100.0%	0.0%	●
P17.54	PID present proportional gain	0.00–100.00	0.00	●
P17.55	PID present integral gain	0.00–10.00s	0.00s	●
P17.56	PID present differential time	0.00–10.00s	0.00s	●
P17.57	Current step of multi-step speed	0–15	0	●
P17.58–P17.59	Reserved			

P18—Closed-loop control state check

Function code	Name	Description	Default value	Modify
P18.00	Actual frequency of encoder	The actual-measured encoder frequency; the value of forward running is positive; the value of reverse running is negative. Range: -999.9–3276.7Hz	0.0Hz	●
P18.01	Encoder position count value	Encoder count value, quadruple frequency, Range: 0–65535	0	●
P18.02	Encoder Z pulse count value	Corresponding count value of encoder Z pulse. Range: 0–65535	0	●
P18.03	High-order bit of position reference value	High-order bit of position reference value, zero out after stop. Range: 0–30000	0	●
P18.04	Low-order bit of position reference	Low-order bit of position reference value, zero out after stop.	0	●

Function code	Name	Description	Default value	Modify
	value	Range: 0–65535		
P18.05	High-order bit of position feedback value	High-order bit of position feedback value, zero out after stop. Range: 0–30000	0	●
P18.06	Low-order bit of position feedback value	Low-order bit of position feedback value, zero out after stop. Range: 0–65535	0	●
P18.07	Position deviation	Deviation between current reference position and actual running position. Range: -32768–32767	0	●
P18.08	Position of position reference point	Position of reference point of Z pulse when the spindle stops accurately. Range: 0–65535	0	●
P18.09	Present position setting of spindle	Current position setup when the spindle stops accurately. Range: 0–359.99	0.00	●
P18.10	Present position when spindle stops accurately	Current position when spindle stops accurately. Range: 0–65535	0	●
P18.11	Encoder Z pulse direction	Z pulse direction display. When the spindle stops accurately, there may be a couple of pulses' error between the position of forward and reverse orientation, which can be eliminated by adjusting Z pulse direction of P20.02 or exchanging phase AB of encoder. 0: Forward 1: Reverse	0	●
P18.12	Encoder Z pulse angle	Reserved. Range: 0.00–359.99	0.00	●
P18.13	Encoder Z pulse error times	Reserved. Range: 0–65535	0	●
P18.14	High-order bit of encoder pulse count value	Encoder pulse count value. The count value is accumulated only if the VFD is powered on. 0–65535	0	●
P18.15	Low-order bit of encoder pulse count value	Encoder pulse count value. The count value is accumulated only if the VFD is powered on. 0–65535	0	●

Function code	Name	Description	Default value	Modify
P18.16	Main control board measured speed value	-3276.8–3276.7Hz	0.0Hz	●
P18.17	Pulse command frequency	Pulse command (A2, B2 terminal) is converted to the set frequency, and it is valid under pulse position mode and pulse speed mode. Range: -3276.8–3276.7Hz	0.00Hz	●
P18.18	Pulse command feedforward	Pulse command (A2, B2 terminal) is converted to the set frequency, and it is valid under pulse position mode and pulse speed mode. Range: -3276.8–3276.7Hz	0.00Hz	●
P18.19	Position regulator output	-327.68–327.67Hz	0.00Hz	●
P18.20	Count value of resolver	Count value of resolver. Range: 0–65535	0	●
P18.21	Resolver angle	The pole position angle read according to the resolver-type encoder. Range: 0.00–359.99	0.00	●
P18.22	Pole angle of closed-loop SM	Current pole position. Range: 0.00–359.99	0.00	●
P18.23	Status word 2	0x0000–0xFFFF	0x0000	●
P18.24	High-order bit of count value of PG card pulse reference	Pulse command (A2,B2) count value. The count value is accumulated only if the VFD is powered on. 0–65535	0	●
P18.25	Low-order bit of count value of PG card pulse reference	Pulse command (A2,B2) count value. The count value is accumulated only if the VFD is powered on. 0–65535	0	●
P18.26	PG card measured speed value	-3276.8–3276.7Hz	0.0Hz	●
P18.27	Encoder UVW sector	0–7	0	●
P18.28	Encoder PPR (pulse-per-revolution) display	0–65535	0	●

Function code	Name	Description	Default value	Modify
P18.29	Angle compensation value of SM	-180.0–180.0	0.0	●
P18.30	Z pulse angle of SM	0.00–655.35	0.00	●
P18.31	Pulse reference Z pulse value	0–65535	0	●
P18.32	Pulse-given main control board measured speed value	-3276.8–3276.7Hz	0.0Hz	●
P18.33	Pulse-given PG card measured speed value	-3276.8–3276.7Hz	0.0Hz	●
P18.34	Present encoder filter width	0–63	0	●
P18.35	8k test duration	0–65535	0	●

P19—Expansion card state check

Function code	Name	Description	Default value	Modify
P19.00	Type of card at slot 1	0–65535 0: No card 1: Programmable card 2: I/O card 3: Incremental PG card 4: Incremental PG card with UVW 5: Ethernet communication card 6: DP communication card 7: Bluetooth card 1 8: Resolver PG card 9: CANopen communication card 10: WIFI card 11: PROFINET communication card 12: Sine/Cosine PG card without CD signal 13: Sine/Cosine PG card with CD signal 14: Absolute encoder PG card 15: CAN master/slave communication card 16: Modbus/Modbus TCP communication	0	●
P19.01	Type of card at slot 2		0	●
P19.02	Type of card at slot 3		0	●

Function code	Name	Description	Default value	Modify
		card 17: EtherCAT communication card 18: BacNet communication card 19: DeviceNet communication card 20: PT100/PT1000 temperature detection card 21: EtherNet IP communication card 22: MECHATROLINK communication card 23: Bluetooth card 2 24–65535: Reserved		
P19.03	Software version of expansion card at slot 1	0.00–655.35	0.00	●
P19.04	Software version of expansion card at slot 2	0.00–655.35	0.00	●
P19.05	Software version of expansion card at slot 3	0.00–655.35	0.00	●
P19.06	Terminal input status of expansion I/O card	0x0000–0xFFFF	0x0000	●
P19.07	Terminal output status of expansion I/O card	0x0000–0xFFFF	0x0000	●
P19.08	HDI3 input frequency of expansion I/O card	0.000–50.000kHz	0.000 kHz	●
P19.09	AI3 input voltage of expansion I/O card	0.00–10.00V	0.00V	●
P19.10	EC PT100 detected temperature	-50.0–150.0°C	0.0°C	●
P19.11	EC PT100 detected digital	0–4096	0	●
P19.12	EC PT1000 detected	-50.0–150.0°C	0.0°C	●

Function code	Name	Description	Default value	Modify
	temperature			
P19.13	EC PT1000 detected digital	0–4096	0	●
P19.14	Alarm display	0–4 0: No alarm 1: PT100 detected OH alarm 2: PT1000 detected OH alarm 3: PT100 disconnection alarm 4: PT1000 disconnection alarm	0	●
P19.15	Communication card control word	0x0000–0xFFFF	0x0000	●
P19.16	Communication card status word	0x0000–0xFFFF	0x0000	●
P19.17	Ethernet monitoring variable 1	0–65535	0	●
P19.18	Ethernet monitoring variable 2	0–65535	0	●
P19.19	Ethernet monitoring variable 3	0–65535	0	●
P19.20	Ethernet monitoring variable 4	0–65535	0	●
P19.21	AI/AO detected temperature	-20.0–200.0°C	0.0°C	●
P19.22–P19.39	Reserved			

P20—Encoder of motor 1

Function code	Name	Description	Default value	Modify
P20.00	Encoder type display	0: Incremental encoder 1: Resolver-type encoder 2: Sin/Cos encoder	0	●

Function code	Name	Description	Default value	Modify
		3: Reserved		
P20.01	Encoder pulse number	Number of pulses generated when the encoder revolves for one circle. Setting range: 0–16000	1024	◎
P20.02	Encoder direction	Ones place: AB direction 0: Forward 1: Reverse Tens place: Z pulse direction (reserved) 0: Forward 1: Reverse Hundreds: CD/UVW pole signal direction 0: Forward 1: Reverse	0x000	◎
P20.03	Detection time of encoder offline fault	Detection time of encoder offline fault. Setting range: 0.0–10.0s **Note:** When the value is 0.0s, the fault will not be detected.	2.0s	○
P20.04	Detection time of encoder reversal fault	Detection time of encoder reversal fault. Setting range: 0.0–100.0s	0.8s	○
P20.05	Filter times of encoder detection	Setting range: 0x00–0x99 Ones place: Low-speed filter time, corresponds to 2^(0–9)×125μs. Tens place: High-speed filter times, corresponds to2^(0–9)×125μs.	0x33	○
P20.06	Speed ratio between encoder mounting shaft and motor	You need to set the function code when the encoder is not installed on the motor shaft and the drive ratio is not 1. Setting range: 0.001–65.535	1.000	○
P20.07	Control parameters of SM	0x0000–0xFFFF Bit0: Enable Z pulse calibration Bit1: Enable encoder angle calibration Bit2: Enable SVC speed measurement Bit3: Reserved Bit4: Reserved Bit5: Reserved	0x0003	○

Function code	Name	Description	Default value	Modify
		Bit6: Enable CD signal calibration Bit7: Reserved Bit8: Do not detect encoder fault during autotuning Bit9: Enable Z pulse detection optimization Bit10: Enable initial Z pulse calibration optimization Bit11: Reserved Bit12: Clear Z pulse arrival signal after stop Bit13: Reserved Bit14: Detect Z pulse after one rotation Bit15: Reserved		
P20.08	Enabling Z pulse offline detection	0x00–0x11 Ones place: Z pulse 0: Do not detect 1: Enable Tens place: UVW pulse (for SM) 0: Do not detect 1: Enable	0x10	○
P20.09	Initial angle of Z pulse	Relative electric angle of encoder Z pulse and motor pole position. Setting range: 0.00–359.99	0.00	○
P20.10	Initial angle of the pole	Relative electric angle of encoder position and motor pole position. Setting range: 0.00–359.99	0.00	○
P20.11	Autotuning of initial angle of pole	0–3 0: No operation 1: Rotary autotuning (DC brake) 2: Static autotuning (suitable for resolver-type encoder, sin/cos with CD signal feedback) 3: Rotary autotuning (initial angle identification)	0	◎
P20.12	Speed measurement optimization selection	0–2 0: No optimization 1: Optimization mode 1 2: Optimization mode 2	1	◎
P20.13	CD signal zero	0–65535	0	○

Function code	Name	Description	Default value	Modify
	offset gain			
P20.14	Encoder type selection	0x00–0x11 Ones place: Incremental encoder 0: without UVW 1: with UVW Tens place: Sin/Cos encoder 0: without CD signal 1: with CD signal	0x00	◎
P20.15	Speed measurement mode	0: PG card 1: local; realized by HDIA and HDIB; supports incremental 24V encoder only	0	◎
P20.16	Frequency division coefficient	0–255 When the function code is set to 0 or 1, frequency division of 1:1 is implemented.	0	○
P20.17	Pulse filter handling selection	0x0000–0xFFFF Bit0: Enable/disable encoder input filter 0: No filter 1: Filter Bit1: Encoder signal filter mode (set Bit0 or Bit2 to 1) 0: Self-adaptive filter 1: Use P20.18 filter parameters Bit2: Enable/disable encoder frequency-division output filter 0: No filter 1: Filter Bit3: Enable/disable filter for frequency-division output of pulse reference 0: No filter 1: Filter Bit4: Enable/disable pulse reference filter 0: No filter 1: Filter Bit5: Pulse reference filter mode (valid when Bit4 is set to 1) 0: Self-adaptive filter 1: Use P20.19 filter parameters Bit6: Frequency-divided output source setting	0x0033	○

Function code	Name	Description	Default value	Modify
		(valid only for incremental encoders) 0: Encoder signals 1: Pulse reference signals Bits7–15: Reserved		
P20.18	Encoder pulse filter width	0–63 The filtering time is P20.18*0.25μs. The value 0 or 1 indicates 0.25μs.	2	○
P20.19	Pulse reference filter width	0–63 The filtering time is P20.19*0.25 μs. The value 0 or 1 indicates 0.25 μs.	2	○
P20.20	Pulse number of pulse reference	0–16000	1024	◎
P20.21	Enable angle compensation of SM	0–1	1	○
P20.22	Switchover frequency threshold of speed measurement mode	0.00–630.00Hz **Note:** Valid only when P20.12=0	1.00Hz	○
P20.23	SM angle compensation coefficient	-200.0–200.0%	100.0%	○
P20.24	Number of pole pairs in inital magnetic pole angle autotuning	1–128	2	◎

P21—Position control

Function code	Name	Description	Default value	Modify
P21.00	Positioning mode	0x0000–0x7121 Ones: Control mode selection 0: Speed control 1: Position control Tens: Position command source 0: Pulse strain 1: Digital position	0x0000	○

Function code	Name	Description	Default value	Modify
		2: Positioning of photoelectric switch during stop Hundreds: Position feedback source (reserved, fixed to channel P) 0: PG1 1: PG2 Thousands: Servo mode (Reserved) 0: Servo disabled, without position deviation 1: Servo disabled, with position deviation 2: Servo enabled, without position deviation 3: Servo enabled, with position deviation 4–7: Reserved **Note:** In pulse train positioning mode or spindle positioning mode, when the servo enabling signal is valid, the VFD enters the servo running mode; when there is no servo enabling signal, the VFD can use the servo running mode only after receiving the FWD or REV running mode.		
P21.01	Pulse command mode	0x0000–0x3133 Ones place: Pulse mode 0: A/B quadrature pulse; A leads B 1: A: PULSE; B: SIGN If channel B is of low electric level, the edge counts up; if channel B is of high electric level, the edge counts down. 2: A: Positive pulse Channel A is positive pulse; channel B needs no wiring 3: A/B dual-channel pulse; channel A pulse edge counts up, channel B pulse edge counts down Tens place: Pulse direction Bit0: Set pulse direction 0: Forward 1: Reverse Bit1: Set pulse direction by running direction 0: Disable, and BIT0 is valid;	0x0000	◎

Function code	Name	Description	Default value	Modify
		1: Enable Hundreds place: Frequency-multiplication selection for pulse + direction (reserved) 0: No frequency-multiplication 1: Frequency-multiplication Thousands place: Pulse control selection Bit0: Pulse filter selection 0: Inertia filter 1: Average moving filter Bit1: Overspeed control 0: No control 1: Control		
P21.02	APR gain 1	The two automatic position regulator (APR) gains are switched based on the switching mode set in P21.04. When the spindle orientation function is used, the gains are switched automatically, regardless of the setting of P21.04. P21.03 is used for dynamic running, and P21.02 is used for maintaining the locked state. Setting range: 0.0–400.0	20.0	○
P21.03	APR gain 2		30.0	○
P21.04	Switching mode of position loop gain	Used to set the APR gain switching mode. To use torque command-based switching, you need to set P21.05; and to use speed command-based switching, you need to set P21.06. 0: No switching 2: Torque command 3: Speed command 3–5: Reserved	0	○
P21.05	Torque command level during position gain switchover	Setting range: 0.0–100.0% (of the motor rated torque)	10.0%	○
P21.06	Speed command level during position gain switchover	0.0–100.0% (of the motor rated speed)	10.0%	○
P21.07	Smooth filter coefficient during	Smooth filter coefficient during position gain switchover.	5	○

Function code	Name	Description	Default value	Modify
	gain switchover	Setting range: 0–15		
P21.08	Output limit of position controller	The output limit of position regulator, if the limit value is 0, position regulator will be invalid, and no position control can be performed, however, speed control is available. Setting range: 0.0–100.0% (of the max. output frequency P00.03)	20.0%	○
P21.09	Completion range of positioning	When the position deviation is less than P21.09, and the duration is larger than P21.10, positioning completion signal will be outputted. Setting range: 0–1000	10	○
P21.10	Detection time for positioning completion	0.0–1000.0ms	10.0ms	○
P21.11	Numerator of position command ratio	Electronic gear ratio, used to adjust the corresponding relation between position command and actual running displacement. Setting range: 1–65535	1000	○
P21.12	Denominator of position command ratio	Setting range: 1–65535	1000	○
P21.13	Position feedforward gain	0.00–120.00% For pulse train reference only (position control)	100.00%	○
P21.14	Position feedforward filter time constant	0.0–3200.0ms For pulse train reference only (position control)	3.0ms	○
P21.15	Position command filter time constant	The position feedforward filter time constant during pulse train positioning. 0.0–3200.0ms	0.0ms	◎
P21.16	Digital positioning mode	0x0000–0xFFFF Bit0: Positioning mode selection 0: Relative position 1: Absolute position (home) (reserved) Bit1: Positioning cycle selection	0x0000	○

Function code	Name	Description	Default value	Modify
		0: Cyclic positioning by terminals 1: Automatic cyclic positioning Bit2: Cycle mode 0: Continuous 1: Repetitive (supported by automatic cyclic positioning only) Bit3: P21.17 digital setting mode 0: Incremental 1: Position type (do not support continuous mode) Bit4: Home searching mode 0: Search for the home just once 1: Search for the home during each run Bit5: Home calibration mode 0: Calibrate in real time 1: Single calibration Bit6: Positioning completion signal selection 0: Valid during the time set by P21.25 (Hold time of positioning completion signal) 1: Always valid Bit7: Initial positioning selection (for cyclic positioning by terminals) 0: Invalid (do not rotate) 1: Valid Bit8: Positioning enable signal selection (for cyclic positioning by terminals only; positioning function is always enabled for automatic cyclic positioning) 0: Pulse signal 1: Level signal Bit9: Position source 0: P21.17 setting 1: PROFIBUS/CANopen setting Bit10: Whether to save encoder pulse counting value at power failure 0: Not save 1: Save Bit11: Reserved		

Function code	Name	Description	Default value	Modify
		Bit12: Positioning curve selection (reserved) 0: Straight line 1: S curve		
P21.17	Position digital reference	Set digital positioning position. Actual position = P21.17*P21.11/P21.12 0–65535	0	○
P21.18	Positioning speed setting selection	0: P21.19 1: AI1 2: AI2 3: AI3 4: High-speed pulse HDIA 5: High-speed pulse HDIB	0	○
P21.19	Positioning speed digits	0–100.0% (of the max. frequency)	20.0%	○
P21.20	ACC time of positioning	Set the ACC/DEC time of positioning process. ACC time of positioning means the time needed for the VFD to accelerate from 0Hz to Max. output frequency (P00.03). DEC time of positioning means the time needed for the VFD to decelerate from Max. output frequency (P00.03) to 0hz. Setting range of P21.20: 0.01–300.00s Setting range of P21.21: 0.01–300.00s	3.00s	○
P21.21	DEC time of positioning		3.00s	○
P21.22	Hold time of positioning arrival	Set the hold time of waiting when target positioning position is reached. Setting range: 0.000–60.000s	0.100s	○
P21.23	Home search speed	0.00–50.00Hz	2.00Hz	○
P21.24	Home position offset	0–65535	0	○
P21.25	Hold time of positioning completion signal	The hold time of positioning completion signal, the function code is also valid for positioning completion signal of spindle orientation. Setting range: 0.000–60.000s	0.200s	○
P21.26	Pulse superposition value	Setting range of P21.26: 0–65535 Setting range of P21.27: 0.0–6553.5pulse/ms	0	○

Function code	Name	Description	Default value	Modify
P21.27	Pulse superposition speed	The function is valid only when P00.06=12 or P21.00=1:	8.0 pulse/ms	○
P21.28	ACC/DEC time after pulse disabling	1: Input terminal function 68 When the terminal rise edge is detected, the pulse setting is increased by P21.26, and the pulse given channel is compensated at the rate specified by P21.27. 2: Input terminal function 67 When the terminal is valid, the pulse value is superposed to the pulse given channel at the rate specified by P21.27. **Note:** P05.09 may have slight impact on the actual superposition value. Example: P21.27 = 1.0 pulse//ms P05.05 = 67 When the S5 terminal input signal is 0.5s, the actual number of pulses superposed is 500. 3: Input terminal function 69 The timing sequence of this value is the same as that of the previous value, with the only difference that the number is negative. **Note:** The pulses are superposed to the pulse given channels (A2 and B2), and the functions such as the filter and electric cam for pulses are valid for superposed pulses. 4: Input terminal function 28 The output terminal is valid during pulse superposition, but it is invalid after pulse superposition.	5.0s	○
P21.29	Speed feedforward filter time constant (pulse train speed mode)	It is the filter time constant detected by pulse train when the speed reference source is set to pulse train (when P00.06=12 or P00.07=12 Setting range: 0–3200.0ms	10.0ms	○
P21.30	Numerator of the 2nd command ratio	1–65535	1000	○
P21.31	Pulse reference speed measuring	0–2 0: Main control board	0	○

Function code	Name	Description	Default value	Modify
	method	1: PG card 2: Hybrid		
P21.32	Pulse reference feedforward source	0x0–0x1	0x0	◎
P21.33	Set value of clearing encoder count	0–65535	0	◎

P22—Spindle positioning

Function code	Name	Description	Default value	Modify
P22.00	Spindle positioning mode selection	0x0000–0xFFFF Bit0: Enable spindle positioning 0: Disable 1: Enable Bit1: Select spindle positioning reference point 0: Z pulse input 1: S2/S3/S4 terminal input Bit2: Search for reference point 0: Search the reference point only once 1: Search the reference point every time Bit3: Enable reference point calibration 0: Disable 1: Enable Bit4: Positioning mode selection 1 0: Set direction positioning 1: Near-by direction positioning Bit5: Positioning mode selection 2 0: Forward positioning 1: Reverse positioning Bit6: Zeroing command selection 0: Electric level mode 1: Pulse mode Bit7: Reference point calibration mode 0: Calibrate at the first time 1: Calibrate in real time Bit8: Action selection after zeroing signal	0x0000	○

Function code	Name	Description	Default value	Modify
		cancellation (electric level type) 0: Switch to speed mode 1: Position lock mode Bit9: Positioning completion signal selection 0: Electric level signal 1: Pulse signal Bit10: Z pulse signal source 0: Motor 1: Spindle Bits 11–15: Reserved		
P22.01	Speed of spindle orientation	During spindle orientation, the speed of the position point of orientation will be searched, and then it will switch over to position control orientation. Setting range: 0.00–100.00Hz	10.00Hz	○
P22.02	DEC time of spindle orientation	DEC time of spindle orientation. Spindle orientation DEC time means the time needed for the VFD to decelerate from Max. output frequency (P00.03) to 0Hz. Setting range: 0.0–100.0s	3.0s	○
P22.03	Spindle zeroing position 0	You can select the zeroing positions of four spindles by terminals (function code 46, 47). Setting range: 0–65535	0	○
P22.04	Spindle zeroing position 1	Setting range: 0–65535	0	○
P22.05	Spindle zeroing position 2	Setting range: 0–65535	0	○
P22.06	Spindle zeroing position 3	Setting range: 0–65535	0	○
P22.07	Spindle scale-division angle 1	You can select seven spindle scale-division values by terminals (function code 48, 49 and 50). Setting range: 0.00–359.99	15.00	○
P22.08	Spindle scale-division angle 2	Setting range: 0.00–359.99	30.00	○
P22.09	Spindle	Setting range: 0.00–359.99	45.00	○

Function code	Name	Description	Default value	Modify
	scale-division angle 3			
P22.10	Spindle scale-division angle 4	Setting range: 0.00–359.99	60.00	○
P22.11	Spindle scale-division angle 5	Setting range: 0.00–359.99	90.00	○
P22.12	Spindle scale-division angle 6	Setting range: 0.00–359.99	120.00	○
P22.13	Spindle scale-division angle 7	Setting range: 0.00–359.99	180.00	○
P22.14	Spindle drive ratio	This function code sets the reduction ratio of the spindle and the mounting shaft of the encoder. Setting range: 0.001–30.000	1.000	○
P22.15	Zero-point communication setup of spindle	P22.15 sets spindle zero-point offset, if the selected spindle zero point is P22.03, the final spindle zero point will be the sum of P22.03 and P22.15. Setting range: 0–39999	0	○
P22.16	Reserved			
P22.17	Reserved			
P22.18	Rigid tapping selection	Ones place: Whether to enable 0: Disable (but can be enabled through terminal, using function 58) 1: Enable (internally enabled) Tens place: Analog input port selection 0: Invalid 1: AI1 2: AI2 3: AI3	0x00	◎
P22.19	Analog filter time of rigid tapping	0.0ms–1000.0ms	1.0ms	○

Function code	Name	Description	Default value	Modify
P22.20	Max. frequency of rigid tapping	0.00–400.00Hz	50.00Hz	○
P22.21	Corresponding frequency of analog zero drift of rigid tapping	0.00–10.00Hz	0.00Hz	○
P22.22–P22.24	Reserved			

P23—Vector control of motor 2

Function code	Name	Description	Default value	Modify
P23.00	Speed-loop proportional gain 1	The parameters P23.00–P23.05 are applicable only to vector control mode. Below the switching frequency 1 (P23.02), the speed-loop PI parameters are: P23.00 and P23.01. Above the switching frequency 2 (P23.05), the speed-loop PI parameters are: P23.03 and P23.04. PI parameters are obtained according to the linear change of two groups of parameters. See the following figure: 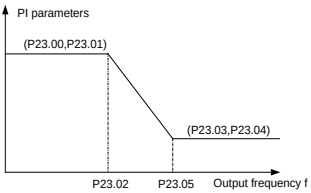 The speed loop dynamic response characteristics of vector control can be adjusted by setting the proportional coefficient and integral time of speed regulator. Increasing proportional gain or reducing integral time can accelerate dynamic response of speed loop; however, if the proportional gain is too large or integral time is too small, system oscillation and overshoot may occur; if proportional gain is too small,	20.0	○
P23.01	Speed-loop integral time 1		0.200s	○
P23.02	Low-point frequency for switching		5.00Hz	○
P23.03	Speed-loop proportional gain 2		20.0	○
P23.04	Speed-loop integral time 2		0.200s	○
P23.05	High-point frequency for switching		10.00Hz	○

Function code	Name	Description	Default value	Modify
		stable oscillation or speed offset may occur. PI parameters have a close relationship with the inertia of the system. Adjust PI parameters depending on different loads to meet various demands. Setting range of P23.00: 0.0–200.0 Setting range of P23.01: 0.000–10.000s Setting range of P23.02: 0.00Hz–P23.05 Setting range of P23.03: 0.0–200.0 Setting range of P23.04: 0.000–10.000s Setting range of P23.05: P23.02–P00.03 (Max. output frequency)		
P23.06	Speed-loop output filter	0–8 (corresponding to 0–2^8/10ms)	0	○
P23.07	Electromotive slip compensation coefficient of vector control	Slip compensation coefficient is used to adjust the slip frequency of the vector control and improve the speed control accuracy of the system. Adjusting the parameter properly can control the speed steady-state error. Setting range: 50–200%	100%	○
P23.08	Power-generation slip compensation coefficient of vector control		100%	○
P23.09	Current-loop proportional coefficient P	**Note:** 1. These two parameters are used to adjust PI parameters of current loop; it affects dynamic response speed and control precision of the system directly. The default value needs no adjustment under common conditions; 2. Applicable to SVC mode 0 (P00.00=0), SVC mode 1 (P00.00=1), and FVC (P00.00=3) Setting range: 0–65535	1000	○
P23.10	Current-loop integral coefficient I		1000	○
P23.11	Speed-loop differential gain	0.00–10.00s	0.00s	○
P23.12	High-frequency current-loop proportional coefficient	In the closed-loop vector control mode (P00.00=3), when the frequency is lower than the current-loop high-frequency switching threshold (P23.14), the current-loop PI	1000	○

Function code	Name	Description	Default value	Modify
P23.13	High-frequency current-loop integral coefficient	parameters are P23.09 and P23.10; and when the frequency is higher than the current-loop high-frequency switching threshold, the current-loop PI parameters are P23.12 and P23.13. Setting range of P23.12: 0–65535 Setting range of P23.13: 0–65535 Setting range of P23.14: 0.0–100.0% (of the max. frequency)	1000	○
P23.14	Current-loop high-frequency switching threshold		100.0%	○
P23.15–P23.19	Reserved			

P24—Encoder of motor 2

Function code	Name	Description	Default value	Modify
P24.00	Encoder type display	0: Incremental encoder 1: Resolver-type encoder 2: Sin/Cos encoder 3: Reserved	0	●
P24.01	Encoder pulse number	Number of pulses generated when the encoder revolves for one circle. Setting range: 0–16000	1024	◎
P24.02	Encoder direction	0x000–0x111 Ones: AB direction 0: Forward 1: Reverse Tens: Z pulse direction (reserved) 0: Forward 1: Reverse Hundreds: CD/UVW pole signal direction 0: Forward 1: Reverse	0x000	◎
P24.03	Detection time of encoder offline fault	0.0–10.0s	2.0s	○
P24.04	Detection time of encoder reversal fault	0.0–100.0s	0.8s	○
P24.05	Filter times of	Setting range: 0x00–0x99	0x33	○

Function code	Name	Description	Default value	Modify
	encoder detection	Ones place: Low-speed filter time, corresponds to 2^(0–9)×125μs. Tens place: High-speed filter times, corresponds to 2^(0–9)×125μs.		
P24.06	Speed ratio between encoder mounting shaft and motor	You need to set the function code when the encoder is not installed on the motor shaft and the drive ratio is not 1. Setting range: 0.000–65.535	1.000	○
P24.07	Control parameters of SM	0x0000–0xFFFF Bit0: Enable/disable encoder input filter 0: No filter 1: Filter Bit1: Encoder signal filter mode 0: Self-adaptive filter 1: Use P24.18 filter parameters Bit2: Enable/disable encoder frequency-division output filter 0: No filter 1: Filter Bit3: Enable/disable pulse reference frequency-division output filter 0: No filter 1: Filter Bit4: Enable/disable pulse reference filter 0: No filter 1: Filter Bit5: Pulse reference filter mode 0: Self-adaptive filter 1: Use P24.19 filter parameters Bit6: Frequency- division output source setting (valid only for incremental encoders) 0: Encoder signals 1: Pulse reference signals Bits 7–15: Reserved	0x0003	○
P24.08	Enabling Z pulse offline detection	0x00–0x11 Ones place: Z pulse 0: Do not detect 1: Enable	0x10	○

Function code	Name	Description	Default value	Modify
		Tens place: UVW pulse (for SM) 0: Do not detect 1: Enable		
P24.09	Initial angle of Z pulse	Relative electric angle of encoder Z pulse and motor pole position. Setting range: 0.00–359.99	0.00	○
P24.10	Initial angle of the pole	Relative electric angle of encoder position and motor pole position. Setting range: 0.00–359.99	0.00	○
P24.11	Autotuning of initial angle of pole	0–3 0: No operation 1: Rotary autotuning (DC brake) 2: Static autotuning (suitable for resolver-type encoder, sin/cos with CD signal feedback) 3: Rotary autotuning (initial angle identification)	0	◎
P24.12	Speed measurement optimization selection	0: No optimization 1: Optimization mode 1 2: Optimization mode 2	1	◎
P24.13	CD signal zero offset gain	0–65535	0	○
P24.14	Encoder type selection	Ones place: Incremental encoder 0: without UVW 1: with UVW Tens place: Sin/Cos encoder 0: without CD signal 1: with CD signal	0x00	◎
P24.15	Speed measurement mode	0: PG card 1: local; realized by HDIA and HDIB; supports incremental 24V encoder only	0	◎
P24.16	Frequency division coefficient	0–255 When the function code is set to 0 or 1, frequency division of 1:1 is implemented.	0	○
P24.17	Pulse filter handling selection	0x0000–0xFFFF Bit0: Enable/disable encoder input filter 0: No filter	0x0033	○

Function code	Name	Description	Default value	Modify
		1: Filter Bit1: Encoder signal filter mode (set Bit0 or Bit2 to 1) 0: Self-adaptive filter 1: Use P24.18 filter parameters Bit2: Enable/disable encoder frequency-division output filter 0: No filter 1: Filter Bit3: Reserved Bit4: Enable/disable pulse reference filter 0: No filter 1: Filter Bit5: Pulse reference filter mode (valid when Bit4 is set to 1) 0: Self-adaptive filter 1: Use P24.19 filter parameters Bit6: Frequency-divided output source setting 0: Encoder signals 1: Pulse reference signals Bits7–15: Reserved		
P24.18	Encoder pulse filter width	0–63 The filtering time is P24.18*0.25us. The value 0 or 1 indicates 0.25μs.	2	○
P24.19	Pulse reference filter width	0–63 The filtering time is P24.19*0.25us. The value 0 or 1 indicates 0.25μs.	2	○
P24.20	Pulse number of pulse reference	0–16000	1024	◎
P24.21	Enable angle compensation of SM	0–1	1	○
P24.22	Switchover frequency threshold of speed measurement mode	0.00Hz–630.00Hz	1.00Hz	○
P24.23	SM angle	-200.0–200.0%	100.0%	○

Function code	Name	Description	Default value	Modify
	compensation coefficient			
P24.24	Number of pole pairs in inital magnetic pole angle autotuning	1–128	2	○

P25—Expansion I/O card input functions

Function code	Name	Description	Default value	Modify
P25.00	HDI3 input type selection	0: HDI3 is high-speed pulse input 1: HDI3 is digital input	0	◎
P25.01	Function of S5	The same as those in P05.01	0	◎
P25.02	Function of S6		0	◎
P25.03	Function of S7		0	◎
P25.04	Function of S8		0	◎
P25.05	Function of S9		0	◎
P25.06	Function of S10		0	◎
P25.07	Function of HDI3		0	◎
P25.08	Expansion card input terminal polarity selection	0x00–0x7F	0x00	○
P25.09	Virtual terminal setting of expansion card	0x00–0x7F (0: Disable, 1: Enable) BIT0: S5 virtual terminal BIT1: S6 virtual terminal BIT2: S7 virtual terminal BIT3: S8 virtual terminal BIT4: S9 virtual terminal BIT5: S10 virtual terminal BIT6: HDI3 virtual terminal	0x00	◎
P25.10	HDI3 switch-on delay	Used to specify the delay time corresponding to the electrical level changes when the programmable input terminals switch on or switch off.	0.000s	○
P25.11	HDI3 switch-off delay		0.000s	○
P25.12	S5 switch-on delay		0.000s	○
P25.13	S5 switch-off delay		0.000s	○
P25.14	S6 switch-on delay		0.000s	○

Function code	Name	Description	Default value	Modify
P25.15	S6 switch-off delay	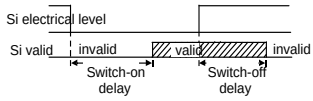	0.000s	○
P25.16	S7 switch-on delay		0.000s	○
P25.17	S7 switch-off delay		0.000s	○
P25.18	S8 switch-on delay	Setting range: 0.000–50.000s	0.000s	○
P25.19	S8 switch-off delay		0.000s	○
P25.20	S9 switch-on delay		0.000s	○
P25.21	S9 switch-off delay		0.000s	○
P25.22	S10 switch-on delay		0.000s	○
P25.23	S10 switch-off delay		0.000s	○
P25.24	AI3 lower limit	Used to define the relationship between the analog input voltage and its corresponding setting. When the analog input voltage exceeds the range from the upper limit to the lower limit, the upper limit or lower limit is used. When the analog input is current input, 0mA–20mA current corresponds to 0V–10V voltage. In different applications, 100.0% of the analog setting corresponds to different nominal values. See the descriptions of each application section for details. The following figure illustrates the cases of several settings: 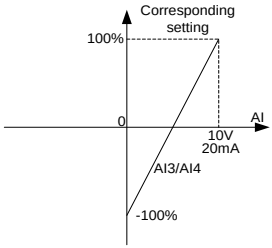 Input filter time: to adjust the sensitivity of analog input. Increasing the value properly can enhance analog input anti-interference but may reduce the sensitivity of analog input.	0.00V	○
P25.25	Corresponding setting of AI3 lower limit		0.0%	○
P25.26	AI3 upper limit		10.00V	○
P25.27	Corresponding setting of AI3 upper limit		100.0%	○
P25.28	AI3 input filter time		0.030s	○
P25.29	AI4 lower limit		0.00V	○
P25.30	Corresponding setting of AI4 lower limit		0.0%	○
P25.31	AI4 upper limit		10.00V	○
P25.32	Corresponding setting of AI4 upper limit		100.0%	○
P25.33	AI4 input filter time		0.030s	○

Function code	Name	Description	Default value	Modify
		Note: AI3 and AI4 can support 0–10V/0–20mA input, when AI3 and AI4 select 0–20mA input, the corresponding voltage of 20mA is 10V. Setting range of P25.24: 0.00V–P25.26 Setting range of P25.25: -300.0%–300.0% Setting range of P25.26: P25.24–10.00V Setting range of P25.27: -300.0%–300.0% Setting range of P25.28: 0.000s–10.000s Setting range of P25.29: 0.00V–P25.31 Setting range of P25.30: -300.0%–300.0% Setting range of P25.31: P25.29–10.00V Setting range of P25.32: -300.0%–300.0% Setting range of P25.33: 0.000s–10.000s		
P25.34	HDI3 high-speed pulse input function	0: Input set through frequency 1: Count	0	◎
P25.35	Lower limit frequency of HDI3	0.000 kHz – P25.37	0.000 kHz	○
P25.36	Corresponding setting of lower limit frequency of HDI3	-300.0%–300.0%	0.0%	○
P25.37	Upper limit frequency of HDI3	P25.35 –50.000kHz	50.000 kHz	○
P25.38	Corresponding setting of upper limit frequency of HDI3	-300.0%–300.0%	100.0%	○
P25.39	HDI3 frequency input filter time	0.000s–10.000s	0.030s	○
P25.40	AI3 input signal type	Range: 0–1 0: Voltage 1: Current	0	○
P25.41	AI4 input signal type	Range: 0–1 0: Voltage 1: Current	0	○
P25.42–P25.45	Reserved			

P26—Output functions of expansion I/O card

Function code	Name	Description	Default value	Modify
P26.00	HDO2 output type	0: Open collector high-speed pulse output 1: Open collector output	0	◎
P26.01	HDO2 output	Same as those in P06.01	0	○
P26.02	Y2 output		0	○
P26.03	Y3 output		0	○
P26.04	RO3 output		0	○
P26.05	RO4 output		0	○
P26.06	RO5 output		0	○
P26.07	RO6 output		0	○
P26.08	RO7 output		0	○
P26.09	RO8 output		0	○
P26.10	RO9 output		0	○
P26.11	RO10 output		0	○
P26.12	Expansion card output terminal polarity	0x0000–0x1FFF Bit0: Y2 Bit1: Y3 Bit2: HDO2 Bit3: RO3 Bit4: RO4 Bit5: RO5 Bit6: RO6 Bit7: RO7 Bit8: RO8 Bit9: RO9 Bit10: RO10 Bit11: RO11 Bit12: RO12	0x0000	○
P26.13	HDO2 switch-on delay	Used to specify the delay time corresponding to the electrical level changes when the programmable output terminals switch on or switch off. 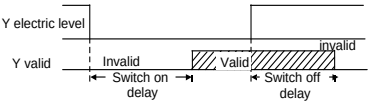 Setting range: 0.000–50.000s **Note:** P26.13 and P26.14 are valid only when	0.000s	○
P26.14	HDO2 switch-off delay		0.000s	○
P26.15	Y2 switch-on delay		0.000s	○
P26.16	Y2 switch-off delay		0.000s	○
P26.17	Y3 switch-on delay		0.000s	○
P26.18	Y3 switch-off delay		0.000s	○
P26.19	RO3 switch-on		0.000s	○

Function code	Name	Description	Default value	Modify
	delay	P26.00=1.		
P26.20	RO3 switch-off delay		0.000s	○
P26.21	RO4 switch-on delay		0.000s	○
P26.22	RO4 switch-off delay		0.000s	○
P26.23	RO5 switch-on delay		0.000s	○
P26.24	RO5 switch-off delay		0.000s	○
P26.25	RO6 switch-on delay		0.000s	○
P26.26	RO6 switch-off delay		0.000s	○
P26.27	RO7 switch-on delay		0.000s	○
P26.28	RO7 switch-off delay		0.000s	○
P26.29	RO8 switch-on delay		0.000s	○
P26.30	RO8 switch-off delay		0.000s	○
P26.31	RO9 switch-on delay		0.000s	○
P26.32	RO9 switch-off delay		0.000s	○
P26.33	RO10 switch-on delay		0.000s	○
P26.34	RO10 switch-off delay		0.000s	○
P26.35	AO2 output	Same as P06.14	0	○
P26.36	AO3 output		0	○
P26.37	Reserved		0	○
P26.38	AO2 output lower limit	Used to define the relationship between the output value and analog output. When the output value exceeds the allowed range, the	0.0%	○
P26.39	AO2 output		0.00V	○

Function code	Name	Description	Default value	Modify
	corresponding to lower limit	output uses the lower limit or upper limit. When the analog output is current output, 1mA equals 0.5V. In different applications, 100% corresponds to different analog outputs. 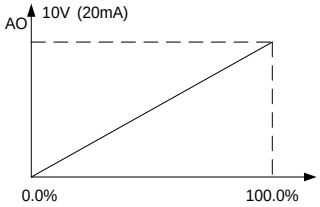 Setting range of P26.38: -300.0%–P26.40 Setting range of P26.39: 0.00V–10.00V Setting range of P26.40: P26.38–100.0% Setting range of P26.41: 0.00V–10.00V Setting range of P26.42: 0.000s–10.000s Setting range of P26.43: -300.0%–P26.45 Setting range of P26.44: 0.00V–10.00V Setting range of P26.45: P26.43–300.0% Setting range of P26.46: 0.00V–10.00V Setting range of P26.47: 0.000s–10.000s		
P26.40	AO2 output upper limit		100.0%	○
P26.41	AO2 output corresponding to upper limit		10.00V	○
P26.42	AO2 output filter time		0.000s	○
P26.43	AO3 output lower limit		0.0%	○
P26.44	AO3 output corresponding to lower limit		0.00V	○
P26.45	AO3 output upper limit		100.0%	○
P26.46	AO3 output corresponding to upper limit		10.00V	○
P26.47	AO3 output filter time		0.000s	○
P26.48–P26.52	Reserved	0–65535	0	○

P27—Programmable expansion card functions

Function code	Name	Description	Default value	Modify
P27.00	Enabling programmable card	0–1 This function is reserved.	0	◎
P27.01	C_WrP1	0–65535 Used to write a value to WrP1 of the programmable card.	0	○
P27.02	C_WrP2	0–65535 Used to write a value to WrP2 of the programmable card.	0	○
P27.03	C_WrP3	0–65535 Used to write a value to WrP3 of the	0	○

Function code	Name	Description	Default value	Modify
		programmable card.		
P27.04	C_WrP4	0–65535 Used to write a value to WrP4 of the programmable card.	0	○
P27.05	C_WrP5	0–65535 Used to write a value to WrP5 of the programmable card.	0	○
P27.06	C_WrP6	0–65535 Used to write a value to WrP6 of the programmable card.	0	○
P27.07	C_WrP7	0–65535 Used to write a value to WrP7 of the programmable card.	0	○
P27.08	C_WrP8	0–65535 Used to write a value to WrP8 of the programmable card.	0	○
P27.09	C_WrP9	0–65535 Used to write a value to WrP9 of the programmable card.	0	○
P27.10	C_WrP10	0–65535 Used to write a value to WrP10 of the programmable card.	0	○
P27.11	Programmable card status	0–1 Used to display the status of the programmable card. 0: Stopped 1: Running	0	●
P27.12	C_MoP1	0–65535 Used to monitor/view the MoP1 value of the programmable card.	0	●
P27.13	C_MoP2	0–65535 Used to monitor/view the MoP2 value of the programmable card.	0	●
P27.14	C_MoP3	0–65535 Used to monitor/view the MoP3 value of the programmable card.	0	●
P27.15	C_MoP4	0–65535	0	●

Function code	Name	Description	Default value	Modify
		Used to monitor/view the MoP4 value of the programmable card.		
P27.16	C_MoP5	0–65535 Used to monitor/view the MoP5 value of the programmable card.	0	●
P27.17	C_MoP6	0–65535 Used to monitor/view the MoP6 value of the programmable card.	0	●
P27.18	C_MoP7	0–65535 Used to monitor/view the MoP7 value of the programmable card.	0	●
P27.19	C_MoP8	0–65535 Used to monitor/view the MoP8 value of the programmable card.	0	●
P27.20	C_MoP9	0–65535 Used to monitor/view the MoP9 value of the programmable card.	0	●
P27.21	C_MoP10	0–65535 Used to monitor/view the MoP10 value of the programmable card.	0	●
P27.22	Digital input terminal status of programmable card	0x00–0x3F Bit5–Bit0 indicate PS6–PS1 respectively.	0x00	●
P27.23	Digital output terminal status of programmable card	0x0–0x3 Bit0 indicates PRO1, and Bit1 indicates PRO2.	0x0	●
P27.24	AI1 of the programmable card	0–10.00V/0.00–20.00mA AI1 value from the programmable card.	0	●
P27.25	AO1 of programmable card	0–10.00V/0.00–20.00mA AO1 value from the programmable card.	0	●
P27.26	Length of data sent by programmable card and PZD communication object	0x00–0x28 Ones place: Quantity of data sent from the programmable card and VFD (that is, quantity of data sent from the programmable card + from VFD sending table 1 + from VFD sending table 2) 0: 0+24+60	0x03	○

Function code	Name	Description	Default value	Modify
		1: 12+24+60 2: 24+24+60 3: 36+24+60 4: 48+24+60 5: 60+48+60 6: 72+24+60 7: 84+24+60 8: 96+96+96 Tens place: Card that communicates with the programmable card through PZD (valid only when the ones place of P27.26 is 5) 0: DP card 1: CANopen card 2: PN card Note: P27.26 can be changed at any time, but the change will only take effect after the re-power on.		
P27.27	Programmable card save function at power failure	0–1 0: Disable 1: Enable	1	◎

P28—Master/slave control functions

Function code	Name	Description	Default value	Modify
P28.00	Master/slave mode	0: Master/slave control is invalid 1: The local machine is a master 2: The local machine is a slave	0	◎
P28.01	Master/slave communication data selection	0: CAN 1: Reserved	0	◎
P28.02	Master/slave control mode	0x000–0x112 Ones place: Master/slave running mode selection 0: Master/slave mode 0 (The master and slave adopt speed control and maintain the power balance by droop control) 1: Master/slave mode 1	0x001	◎

Function code	Name	Description	Default value	Modify
		(The master and slave must be in the same type of vector control mode. The master is speed control, and the slave will be forced to be in the torque control mode. 2: Master/slave mode 2 Start in the slave first speed mode (master/slave mode 0) and then switch to torque mode at a certain frequency point (master/slave mode 1) Tens place: Slave start command source selection 0: Follow the master to start 1: Determined by P00.01 Hundreds place: Slave transmitting/master receiving data enable 0: Enable 1: Disable		
P28.03	Slave speed gain	0.0–500.0%	100.0%	○
P28.04	Slave torque gain	0.0–500.0%	100.0%	○
P28.05	Speed/torque mode switching frequency point in master/slave mode 2	0.00–10.00Hz	5.00Hz	○
P28.06	Slave count	0–15	1	◎
P28.07–P28.08	Reserved			
P28.09	CAN slave torque offset	-100.0–100.0%	0.0%	○
P28.10	Enabling EC PT100/PT1000 to detect temperature	0x00–0x11 Ones place: PT100 temperature detection 0: Disable 1: Enable Tens place: PT1000 temperature detection 0: Disable 1: Enable	0x00	◎
P28.11	EC PT100 detected	Protection threshold of overheating (OH)	120.0°C	○

Function code	Name	Description	Default value	Modify
	OH protection threshold	detected by the expansion card (EC) with PT100. 0.0–150.0°C		
P28.12	EC PT100 detected OH pre-alarm threshold	Pre-alarm threshold of OH detected by the EC with PT100. 0.0–150.0°C	100.0°C	○
P28.13	EC PT100 detected temperature calibration upper limit	Calibration upper limit of temperature detected by the EC with PT100. 50.0–150.0°C	120.0°C	○
P28.14	EC PT100 detected temperature calibration lower limit	Calibration lower limit of temperature detected by the EC with PT100. -20.0–50.0°C	10.0°C	○
P28.15	EC PT100 calibration upper limit digital	0–4096	2950	○
P28.16	EC PT100 calibration lower limit digital	0–4096	1270	○
P28.17	EC PT1000 detected OH protection threshold	0.0–150.0°C	120.0°C	○
P28.18	EC PT1000 detected OH pre-alarm threshold	0.0–150.0°C	100.0°C	○
P28.19	PT1000 detected temperature calibration upper limit	50.0–150.0°C	120.0°C	○
P28.20	EC PT1000 detected temperature calibration lower limit	-20.0–50.0°C	10.0°C	○
P28.21	EC PT1000 calibration upper limit digital	0–4096	3100	○

Function code	Name	Description	Default value	Modify
P28.22	EC PT1000 calibration lower limit digital	0–4096	1100	○
P28.23	Detecting for PT100/PT1000 disconnection from EC	0x00–0x11 Ones place: PT100 disconnection detection 0: Disable 1: Enable Tens place: PT1000 disconnection detection 0: Disable 1: Enable	0x00	◎
P28.24	Enabling digital calibration in EC PT100/PT1000 temperature detection	0–4 0: Disable 1: Enable PT100 lower limit digital calibration. 2: Enable PT100 upper limit digital calibration. 3: Enable PT1000 lower limit digital calibration. 4: Enable PT1000 upper limit digital calibration.	0	○
P28.25	Type of sensor for AI/AO card to detect motor temperature	0–4 0: No temperature sensor 1: PT100 2: PT1000 3: KTY84 4: PTC (Measuring resistance only) **Note:** Temperature is displayed through P19.11. To measure temperature, switch the output of AO1 to current, and connect one end of the temperature resistor to AI1 and AO1, and the other end to GND.	0	◎
P28.26	AI/AO detected motor OH protection threshold	0.0–200.0°C **Note:** When the motor temperature exceeds the threshold, the VFD releases the OT alarm.	110.0°C	○
P28.27	AI/AO detected motor OH pre-alarm threshold	0.0–200.0°C **Note:** When the motor temperature exceeds the value, the DO terminal with function 48 (AI detected motor OH pre-alarm) outputs a valid signal.	90.0°C	○

P90—Tension control in speed mode

Function code	Name	Description	Default	Modify
P90.00	Tension control mode	0: Invalid 1: Speed mode 2: Open-loop torque mode 3: Closed-loop torque mode **Note:** The value 0 indicates tension control is invalid. Select a non-0 value to enable the tension control function.	0	◎
P90.01	Winding/ unwinding mode	0: Winding 1: Unwinding **Note:** The motor forward rotation direction is the winding direction. When using the tension control mode, check whether the motor rotation direction is correct in the winding mode; if not, change the rotation direction by swapping two phase wires of the motor. After the rotation direction is corrected, the winding mode can be switched to the unwinding mode by setting P90.01 to 1 or changing the winding/unwiding switchover terminals.	0	○
P90.02	Reel mechanical transmission rate	0.01–600.00 =Motor rotation speed/Reel rotation speed=Reel diameter/Motor shaft diameter	1.00	○
P90.03	Max. linear speed	0.0–6000.0 m/min	1000.0 m/min	○
P90.04	Input source of linear speed	0: Keypad 1: AI1 2: AI2 3: AI3 4: High-speed pulse HDI 5: Main traction encoder frequency-division input	0	◎
P90.05	Linear speed set through keypad	0.0–100.0%	20.0%	○
P90.06	Diameter of main traction	0.0–6000.0mm	99.0mm	○
P90.07	Main traction drive	0.000–60.000	1.000	○

Function code	Name	Description	Default	Modify
	ratio			
P90.08	Linear speed ACC time	0.00–600.00s	0.00s	○
P90.09	Linear speed DEC time	0.00–600.00s	0.00s	○
P90.10	Tension setting	0x00–0x14 Ones place: Tension setting source 0: Keypad 1: AI1 2: AI2 3: AI3 4: High-speed pulse HDI Tens place: Multiplier of max. tension (P90.12) 0: 1 1: 10	0x00	◎
P90.11	Tension set through keypad	0.0–100.0%	10.0%	○
P90.12	Max. tension	When the tens place of P90.10 is 0, the setting range is 0–60000N. When the tens place of P90.10 is 1, the setting range is (0–60000)*10N.	1000N	○
P90.13	Roll diameter calculation mode	0: Not calculated 1: AI1 2: AI2 3: AI3 4: High-speed pulse HDI 5: Linear speed 6: Thickness (of wire) 7: Thickness (of strip)	0	◎
P90.14	Roll diameter calculation delay time	0.0–100.0s	1.0s	○
P90.15	Min. roll diameter	0.0mm–P90.16	50.0mm	○
P90.16	Max. roll diameter	P90.15–5000.0mm	1000.0 mm	○
P90.17	Initial roll diameter 1	P90.15–P90.16 (mm)	100.0 mm	○

Function code	Name	Description	Default	Modify
P90.18	Initial roll diameter 2	P90.15–P90.16 (mm)	100.0 mm	○
P90.19	Initial roll diameter 3	P90.15–P90.16 (mm)	100.0 mm	○
P90.20	Linear speed roll diameter calculation filter time	0.000–60.000s	2.000s	○
P90.21	Linear speed roll diameter calculation restriction	0x00–0x11 Ones place: 0:No 1: Restrict changes in reverse direction Tens place: 0: No 1: Automatic restriction according to running frequency and material thickness	0x00	○
P90.22	Material thickness	0.001–65.535mm	0.010 mm	○
P90.23	Number of coils per layer	1–10000	1	◎
P90.24	Revolution counting function selection	0–2 0: Digital terminal input 1: PG card input (Applicable to thickness calculation method) 2: Running frequency (No input automatic revolution counting)	0	◎
P90.25	Number of pulses per revolution	1–60	1	◎
P90.26	Roll diameter set value	0.0–100.0%	80.0%	○
P90.27	Roll diameter reset setting	0x0000–0x1111 Ones place: At stop 0: Remain current roll diameter 1: Restore to initial roll diameter Tens place: Power off at running 0: Remain current roll diameter 1: Restore to initial roll diameter Hundreds place: Reach the roll diameter set	0x1000	○

Function code	Name	Description	Default	Modify
		value 0: Remain current roll diameter 1: Restore to initial roll diameter Thousands place: Terminal reset limitation 0: Reset allowed at running 1: Reset only allowed at stop		
P90.28	Tension PID output reference	0–1 0: Max. value 1: Given value	0	○
P90.29	Tension PID parameter source	0–5 0: First group of P90 1: Roll diameter (max. roll diameter) 2: Main reference frequency (max. Frequency) 3: Running linear speed (max. linear speed) 4: Deviation (Reference 100%) 5: Terminal	0	○
P90.30	Group 1 proportional gain	0.000–30.000	0.030	○
P90.31	Group 1 integral time	0.00–30.00s	5.00s	○
P90.32	Group 1 differential time	0.00–10.00s	0.00s	○
P90.33	Group 2 proportional gain	0.000–30.000	0.030	○
P90.34	Group 2 integral time	0.00–30.00s	5.00s	○
P90.35	Group 2 differential time	0.00–10.00s	0.00s	○
P90.36	PID parameter adjustment reference point 1	0.0%–P90.37	10.0%	○
P90.37	PID parameter adjustment reference point 2	P90.36–100.0%	50.0%	○
P90.38	Min. frequency for roll diameter calculation	0.00–50.00Hz	0.30Hz	○

Function code	Name	Description	Default	Modify
P90.39	Min. linear speed for roll diameter calculation	0.0–100.0%	3.0%	○

P91—Tension control in torque mode

Function code	Name	Description	Default	Modify
P91.00	Tension control zero speed reference	0–1 0: Max. linear speed 1: Max. frequency	0	◎
P91.01	Tension control zero speed threshold	0.0–50.0%	0.5%	○
P91.02	Zero speed offset	0.0–50.0%	2.0%	○
P91.03	Upper-limit frequency source of torque control	0–3 0: P03.14, P03.15 1: Forward rotation limit set by line speed 2: Reverse rotation limit set by line speed 3: Forward and reverse rotations limit set by line speed	3	◎
P91.04	Running frequency upper limit offset of tension control	0.0–100.0%	5.0%	○
P91.05	Differential separation threshold	0.0–100.0%	5.0%	○
P91.06	PID restricts reverse limit at zero speed	0–1 0: Enable 1: Disable	0	◎
P91.07	Torque compensation selection	0x000–0x111 Ones place: Frictional torque compensation 0: No 1: Yes Tens place: Inertia compensation 0: No 1: Yes Hundreds place: Compensation direction	0x000	◎

Function code	Name	Description	Default	Modify
		0: In line with torque direction 1: Different from torque direction		
P91.08	System mechanical parameters identification	0–2 0: No operation 1: Enable system mechanical inertia identification 2: Enable mechanical friction torque identification	0	◎
P91.09	Static friction torque compensation coefficient	0.0–100.0%	0.0%	○
P91.10	Sliding friction torque compensation coefficient 1	0.0–100.0%	0.0%	○
P91.11	Sliding friction torque compensation coefficient 2	0.0–100.0%	0.0%	○
P91.12	Sliding friction torque compensation coefficient 3	0.0–100.0%	0.0%	○
P91.13	High speed torque compensation coefficient	0.0–100.0%	0.0%	○
P91.14	Compensation frequency point of static friction torque	0.0%–P91.15	1.0%	○
P91.15	Compensation frequency point of sliding friction torque 1	P91.14–P91.16 (%)	20.0%	○
P91.16	Compensation frequency point of sliding friction torque 2	P91.15–P91.17 (%)	50.0%	○

Function code	Name	Description	Default	Modify
P91.17	Compensation frequency point of sliding friction torque 3	P91.16–P91.18 (%)	80.0%	○
P91.18	High-speed friction torque compensation frequency point	P91.17–100.0%	100.0%	○
P91.19	ACC/DEC frequency source	0–1 0: Linear speed 1: Running frequency	0	◎
P91.20	Material density	0–30000 kg/m^3	0 kg/m^3	○
P91.21	Reel width	0.000–60.000m	0.000m	○
P91.22	ACC inertia compensation coefficient	0.0–100.0%	10.0%	○
P91.23	DEC inertia compensation coefficient	0.0–100.0%	10.0%	○
P91.24	Tension taper coefficient source	0–4 0: Keypad 1: AI1 2: AI2 3: AI3 4: High-speed pulse HDI	0	◎
P91.25	Tension taper set through keypad	0.0–100.0%	30.0%	○
P91.26	Tension taper compensation correction	0.0–5000.0mm	0.0mm	○
P91.27	Tension taper curve selection	0–1 0: Inverse proportional curve 1: Multi-point curve	0	◎
P91.28	Roll diameter value 1	0.0–5000.0mm	200.0 mm	○
P91.29	Tension taper coefficient for roll	0.0–50.0%	3.0%	○

Function code	Name	Description	Default	Modify
	diameter value 1			
P91.30	Roll diameter value 2	0.0–5000.0mm	500.0 mm	○
P91.31	Tension taper coefficient for roll diameter value 2	0.0–50.0%	7.0%	○
P91.32	Tension offset value at zero speed	0.0–300.0%	0.0%	○
P91.33	Present roll diameter setting	0.0–5000.0mm	0.0mm	◎

P92—Customized tension control functions

Function code	Name	Description	Default	Modify
P92.00	Pre-drive speed gain	0.0–100.0%	100.0%	○
P92.01	Pre-drive torque limit	0–2 0: Set based on P03.20, P03.21 1: Set based on P93.02 2: Set based on the set tension	2	○
P92.02	Pre-drive torque limit setting	0.0–200.0%	100.0%	○
P92.03	Zero bit conversion enabling	0–1 0: Disable 1: Enable	0	◎
P92.04	Initial zero bit	0.0–100.0%	10.0%	○
P92.05	Final zero bit	0.0–100.0%	50.0%	○
P92.06	Conversion time from initial zero bit to final zero bit	0.00–60.00s	5.00s	○
P92.07	Conversion time from final zero bit to initial zero bit	0.00–60.00s	5.00s	○
P92.08	Feeding interrupt detection mode	0–3 0: Not detect 1: Detect based on digital value 2: Detect based on roll diameter calculation	0	○

Function code	Name	Description	Default	Modify
		value 3: Detect based on feedback position		
P92.09	Feeding interrupt detection start delay time	0.0–200.0s	20.0s	○
P92.10	Frequency lower limit of feeding interrupt detection	0.00–300.00Hz	10.00 Hz	○
P92.11	Error range of feeding interrupt detection	0.1–50.0%	10.0%	○
P92.12	Determination delay time of feeding interrupt detection	0.1–60.0s	1.0s	○
P92.13	Handling mode of feeding interrupt	0x000–0x111 Ones place: Stop mode 0: Decelerate to stop in emergency manner 1: Coast to stop Tens place: Alarm mode 0: Stop in enabled stop mode without reporting an alarm 1: Report an alarm and coast to stop Hundreds place: Roll diameter memory function of feeding interrupt 0: Disable 1: Enable	0x000	◎
P92.14	Stop braking frequency	0.00–300.00Hz	1.50Hz	○
P92.15	Stop braking time	0.0–600.0s	0.0s	○

P93—Tension control status viewing

Function code	Name	Description	Default	Modify
P93.00	Actual control mode	0–3 0: Invalid tension control 1: Close-loop tension speed control	0	●

Function code	Name	Description	Default	Modify
		2: Open loop tension torque control 3: Close-loop tension torque control		
P93.01	Actual winding/ unwinding mode	0–1 0: Winding 1: Unwinding	0	●
P93.02	Initial roll diameter	0.0–5000.0mm	0.0mm	●
P93.03	Reset roll diameter	0.0–5000.0mm	0.0mm	●
P93.04	Roll diameter change rate	0.00–655.35 mm/s	0.00 mm/s	●
P93.05	Present roll diameter	0.0–5000.0mm	0.0mm	●
P93.06	Roll diameter for linear speed calculation	0.0–5000.0mm	0.0mm	●
P93.07	Set linear speed	0.0–6000.0 m/min	0.0 m/min	●
P93.08	Present linear speed	0.0–6000.0 m/min	0.0 m/min	●
P93.09	Main reference frequency	0.00–600.00Hz	0.00 Hz	●
P93.10	Actual proportional gain	0.00–30.00	0.00	●
P93.11	Actual integral time	0.00–30.00s	0.00s	●
P93.12	Proportional output value	0–65535	0	●
P93.13	Integral output value	0–65535	0	●
P93.14	PID upper limit	-100.0–100.0%	0.0%	●
P93.15	PID lower limit	-100.0–100.0%	0.0%	●
P93.16	PID output frequency	-99.99–99.99Hz	0.00Hz	●
P93.17	Main traction running frequency	-300.0–300.0Hz	0.0Hz	●
P93.18	Set tension	0–30000N	0N	●
P93.19	Tension taper coefficient	0.0–100.0%	0.0%	●
P93.20	Actual tension	0–30000N	0N	●
P93.21	Basic torque	-300.0–300.0%	0.0%	●

Function code	Name	Description	Default	Modify
	reference value			
P93.22	Friction compensation torque value	-300.0–300.0%	0.0%	●
P93.23	System rotational inertia	0.00–655.35 kg.m^2	0.00 kg.m^2	●
P93.24	Frequency change rate	-99.99–327.67 Hz/s	0.00 Hz/s	●
P93.25	Torque compensation value of system rotational inertia	-300.0–300.0%	0.0%	●
P93.26	Reference value after torque compensation	-300.0–300.0%	0.0%	●
P93.27	PID output torque	-300.0–300.0%	0.0%	●
P93.28	Final output torque	-300.0–300.0%	0.0%	●
P93.29	Measured tension	0–30000N	0N	●
P93.30	Number of material turns on the reel	-100–32767	0	●
P93.31	Length of material on the reel	0–65535m	0m	●
P93.32	Length increment	0.0–6553.5m	0.0m	●

7 Troubleshooting

7.1 What this chapter contains

The chapter instructs you how to reset faults and check faults history. A complete list of alarms and fault information as well as possible causes and corrective measures are presented in this chapter.

	✧ Only trained and qualified professionals are allowed to carry out the work described in this chapter. Operations should be carried out according to the instructions presented in Safety precautions.

7.2 Indications of alarms and faults

The fault is indicated by indicators (see "Operating the VFD through the keypad"). When TRIP indicator is on, the alarm or fault code displayed in the keypad indicates the VFD is in exception state. This chapter covers most of the alarms and faults, and their possible causes and corrective measures, if users cannot figure out the alarm or fault causes, contact local INVT office.

7.3 Fault reset

You can reset the VFD through the STOP/RST key on the keypad, digital inputs, or by cutting off the VFD power. After faults are removed, the motor can be start again.

7.4 Fault history

P07.27–P07.32 record the six latest fault types; P07.33–P07.40, P07.41–P07.48, and P07.49–P07.56 record the running data of the VFD when the latest three faults occurred.

7.5 VFD faults and solutions

When a fault occurred, handle the fault as follows.

1. When a VFD fault occurred, confirm whether keypad display is improper? If yes, contact INVT;
2. If keypad works properly, check the function codes in P07 group to confirm the corresponding fault record parameters, and determine the real state when current fault occurred through parameters;
3. Check the table below to see whether corresponding exception states exist based on the corresponding corrective measures;
4. Rule out the faults or ask for help from professionals;
5. After confirming faults are removed, reset the fault and start running.

7.5.1 Details of faults and solutions

Note: The numbers enclosed in square brackets such as [1], [2] and [3] in the **Fault type** column in the following table indicate the VFD fault type codes read through communication.

Fault code	Fault type	Possible cause	Corrective measures
OUt1	[1] Inverter unit phase-U protection	Acceleration is too fast; IGBT module is damaged;	Increase acceleration time; Replace the power unit;

Fault code	Fault type	Possible cause	Corrective measures
OUt2	[2] Inverter unit phase-V protection	Misacts caused by interference; drive wires are poorly connected; Shorted to ground.	Check drive wires; Check whether there is strong interference surrounds the peripheral equipment
OUt3	[3] Inverter unit phase-W protection		
OV1	[7] Over-voltage during acceleration	Deceleration time is too short; Exception occurred to input voltage; Large energy feedback; Lack of braking units; Dynamic braking is not enabled	Check input power; Check whether load deceleration time is too short; or the motor starts during rotating; Install dynamic braking units; Check the setup of related function codes
OV2	[8] Over-voltage during deceleration		
OV3	[9] Over-voltage during constant speed running		
OC1	[4] Over-current during acceleration	Acceleration is too fast; Grid voltage is too low; VFD power is too small; Load transient or exception occurred; To-ground short circuit or output phase loss occur; Strong external interference sources; Overcurrent stall protection is not enabled	Increase acceleration /deceleration time; Check input power; Select the VFD with larger power; Check if the load is short circuited (to-ground short circuit or line-to-line short circuit) or the rotation is not smooth; Check the output wiring; Check if there is strong interference; Check the setup of related function codes.
OC2	[5] Over-current during deceleration		
OC3	[6] Over-current during constant speed running		
UV	[10] Bus undervoltage fault	Grid voltage is too low; Overvoltage stall protection is not enabled	Check grid input power; Check the setup of related function codes
OL1	[11] Motor overload	Grid voltage is too low; Rated motor current is set improperly; Motor stall or load jumps violently	Check grid voltage; Reset rated motor current; Check the load and adjust torque boost
OL2	[12] VFD overload	Acceleration is too fast; The motor in rotating is restarted;	Increase acceleration time; Avoid restart after stop; Check grid voltage;

Fault code	Fault type	Possible cause	Corrective measures
		Grid voltage is too low; Load is too large; Power is too small;	Select the VFD with larger power; Select proper motor
SPI	[13] Phase loss on input side	Phase loss or violent fluctuation occurred to R, S and T input	Check the input power; Check installation wiring
SPO	[14] Phase loss on output side	Phase loss occurred to U, V, W output (or the three phases of motor is asymmetrical)	Check the output wiring; Check the motor and cable
OH1	[15] Overheat of rectifier module	Air duct is blocked or fan is damaged; Ambient temperature is too high; Long-time overload running	Ventilate the air duct or replace the fan; Lower the ambient temperature
OH2	[16] Overheat of inverter module		
EF	[17] External fault	SI external fault input terminal acts	Check external device input
CE	[18] Modbus/Modbus TCP communication fault	Baud rate is set improperly; Communication line fault; Communication address error; Communication suffers from strong interference	Set proper baud rate; Check the wiring of communication interfaces; Set proper communication address; Replace or change the wiring to enhance anti-interference capacity
ItE	[19] Current detection fault	Poor contact of the connector of control board; Hall component is damaged; Exception occurred to amplification circuit	Check the connector and re-plug; Replace the hall component; Replace the main control board
tE	[20] Motor autotuning fault	Motor capacity does not match with the VFD capacity, this fault may occur easily if the difference between them is exceeds five power classes; Motor parameter is set	Change the VFD model, or adopt V/F mode for control; Set proper motor type and nameplate parameters; Empty the motor load and carry out autotuning again; Check motor wiring and

Fault code	Fault type	Possible cause	Corrective measures
		improperly; The parameters gained from autotuning deviate sharply from the standard parameters; Autotuning timeout	parameter setup; Check whether upper limit frequency is larger than 2/3 of the rated frequency
EEP	[21] EEPROM fault	R/W error occurred to the control parameters; EEPROM is damaged	Press STOP/RST to reset; Replace the main control board
PIDE	[22] PID feedback offline fault	PID feedback offline; PID feedback source disappears;	Check PID feedback signal wires; Check PID feedback source
bCE	[23] Braking unit fault	Braking circuit fault or braking tube is damaged; The resistance of external braking resistor is too small	Check the braking unit, replace with new braking tubes; Increase braking resistance
END	[24] Running time is up	The actual running time of the VFD is larger than the set running time	Ask help from the supplier, adjust the set running time
OL3	[25] Electronic overload fault	The VFD releases overload pre-alarm based on the set value	Check the load and overload pre-alarm threshold
PCE	[26] Keypad communication fault	The keypad wire is poorly contacted or disconnected; The keypad wire is too long and suffers strong interference; Circuit fault occurred to the keypad or communication part of the main board	Check the keypad wires to confirm whether fault exists; Check the surroundings to rule out interference source; Replace the hardware and ask for maintenance service
UPE	[27] Parameter upload error	The keypad wire is poorly contacted or disconnected; The keypad wire is too long and suffers strong interference; Circuit fault occurred to the keypad or communication part of the main board	Check the surroundings to rule out interference source; Replace the hardware and ask for maintenance service; Replace the hardware and ask for maintenance service

Fault code	Fault type	Possible cause	Corrective measures
DNE	[28] Parameter download error	The keypad wire is poorly contacted or disconnected; The keypad wire is too long and suffers strong interference; Data storage error occurred to the keypad	Check the surroundings to rule out interference source; Replace the hardware and ask for maintenance service; Re-backup keypad data
ETH1	[32] To-ground short circuit fault 1	VFD output is short connected to the ground; Current detection circuit is faulty; Actual motor power setup deviates sharply from the VFD power	Check whether motor wiring is proper; Replace the hall component; Replace the main control board; Reset the motor parameters properly
ETH2	[33] To-ground short circuit fault 1	VFD output is short connected to ground; Current detection circuit is faulty; Actual motor power setup deviates sharply from the VFD power	Check whether motor wiring is proper; Replace the hall component; Replace the main control board; Reset the motor parameters properly
dEu	[34] Speed deviation fault	Load is too heavy, or stall occurred	Check the load to ensure it is proper, increase the detection time; Check whether control parameters are set properly
STo	[35] Maladjustment fault	Control parameters of synchronous motor is set improperly; The parameter gained from autotuning is inaccurate; The VFD is not connected to motor	Check the load to ensure it is proper, Check whether load is proper; Check whether control parameters are set correctly; Increase maladjustment detection time
LL	[36] Electronic underload fault	The VFD performs underload pre-alarm based on the set value	Check the load and overload pre-alarm threshold
ENC1o	[37] Encoder offline fault	Encoder line sequence is wrong, or signal wires are	Check the encoder wiring

Fault code	Fault type	Possible cause	Corrective measures
		poorly connected	
ENC1d	[38] Encoder reversal fault	The encoder speed signal is contrary to the motor running direction	Reset encoder direction
ENC1Z	[39] Encoder Z pulse offline fault	Z signal wires are disconnected	Check the wiring of Z signal
OT	[59] Motor over-temperature fault	Motor over-temperature input terminal is valid; Exception occurred to t temperature detection Exception occurred to resistor; Long-time overload running or exception occurred	Check the wiring of motor over-temperature input terminal (terminal function 57); Check whether temperature sensor is proper; Check the motor and perform maintenance on the motor
STO	[40] Safe torque off	Safe torque off function is enabled by external forces	/
STL1	[41] Exception occurred to safe circuit of channel H1	The wiring of STO is improper; Fault occurred to external switch of STO; Hardware fault occurred to safety circuit of channel H1	Check whether terminal wiring of STO is proper and firm enough; Check whether external switch of STO can work properly and restart it; Replace the control board
STL2	[42] Exception occurred to channel H2 safe circuit	The wiring of STO is improper; Fault occurred to external switch of STO; Hardware fault occurred to safety circuit of channel H2	Check whether terminal wiring of STO is proper and firm enough; Check whether external switch of STO can work properly and restart it; Replace the control board
STL3	[43] Exception occurred to channel H1 and channel H2	Hardware fault occurred to STO circuit	Replace the control board
CrCE	[44] Safety code FLASH CRC check fault	Control board is faulty	Replace the control board
E-Err	[55] Repetitive expansion card type	The two inserted expansion cards are of the same type	You should not insert two cards with the same type;

Fault code	Fault type	Possible cause	Corrective measures
			check the type of expansion card, and remove one card after power down
ENCUV	[56] Encoder UVW loss fault	No electric level variation occurred to UVW signal	Check the wiring of UVW; Encoder is damaged
F1-Er	[60] Failed to identify the expansion card in card slot 1	There is data transmission in interfaces of card slot 1, however, it cannot read the card type	Confirm whether the expansion card inserted can be supported; Stabilize the expansion card interfaces after power down, and confirm whether fault still occurs at next power-on; Check whether the insertion port is damaged, if yes, replace the insertion port after power down
F2-Er	[61] Failed to identify the expansion card in card slot 2	There is data transmission in interfaces of card slot 2, however, it cannot read the card type	Confirm whether the expansion card inserted can be supported; Stabilize the expansion card interfaces after power down, and confirm whether fault still occurs at next power-on; Check whether the insertion port is damaged, if yes, replace the insertion port after power down
F3-Er	[62] Failed to identify the expansion card in card slot 3	There is data transmission in interfaces of card slot 3, however, it cannot read the card type	Confirm whether the expansion card inserted can be supported; Stabilize the expansion card interfaces after power down, and confirm whether fault still occurs at next power-on; Check whether the insertion port is damaged, if yes, replace the insertion port after power down

Fault code	Fault type	Possible cause	Corrective measures
C1-Er	[63] Communication timeout occurred to the expansion card in card slot 1	There is no data transmission in interfaces of card slot 1	Confirm whether the expansion card inserted can be supported; Stabilize the expansion card interfaces after power down, and confirm whether fault still occurs at next power-on; Check whether the insertion port is damaged, if yes, replace the insertion port after power down
C2-Er	[64] Communication timeout occurred to the expansion card in card slot 2	There is no data transmission in interfaces of card slot 2	Confirm whether the expansion card inserted can be supported; Stabilize the expansion card interfaces after power down, and confirm whether fault still occurs at next power-on; Check whether the insertion port is damaged, if yes, replace the insertion port after power down
C3-Er	[65] Communication timeout occurred to the expansion card in card slot 3	There is no data transmission in interfaces of card slot 3	Confirm whether the expansion card inserted can be supported; Stabilize the expansion card interfaces after power down, and confirm whether fault still occurs at next power-on; Check whether the insertion port is damaged, if yes, replace the insertion port after power down
E-DP	[29] PROFIBUS card communication timeout fault	There is no data transmission between the communication card and the host controller (or PLC).	Check whether the communication card wiring is loose or dropped.
E-NET	[30] Ethernet card	There is no data	Check whether the

Fault code	Fault type	Possible cause	Corrective measures
	communication timeout fault	transmission between the communication card and the host controller.	communication card wiring is loose or dropped.
E-CAN	[31] CANopen card communication timeout fault	There is no data transmission between the communication card and the host controller (or PLC)	Check whether the communication card wiring is loose or dropped.
E-PN	[57] PROFINET card communication timeout fault	There is no data transmission between the communication card and the host controller (or PLC)	Check whether the communication card wiring is loose or dropped.
E-CAT	[66] EtherCAT card communication timeout fault	There is no data transmission between the communication card and the host controller (or PLC)	Check whether the communication card wiring is loose or dropped
E-BAC	[67] BACNet card communication timeout fault	There is no data transmission between the communication card and the host controller (or PLC).	Check whether the communication card wiring is loose or dropped
E-DEV	[68] DeviceNet card communication timeout fault	There is no data transmission between the communication card and the host controller (or PLC).	Check whether the communication card wiring is loose or dropped
SECAN	[58] CAN master/slave communication card communication timeout fault	There is no data transmission between the CAN master and slave communication cards	Check whether the communication card wiring is loose or dropped
S-Err	[69] CAN slave fault in master/slave synchronization	Fault occurred to one of the CAN slave VFDs	Detect the CAN slave VFD and analyze the corresponding fault cause of the VFD
P-E1–P-E10	[45]–[54] Programmable card customized faults 1–10	User program logic error in the programmable card. A fault occurred on the customized position.	Check the user program logic. Perform troubleshooting based on actual customized faults.
OtE1	[70] EC PT100 detected OH	The PT100 temperature sensor is inaccurate or not	Calibrate the sensor through parameter settings.

Fault code	Fault type	Possible cause	Corrective measures
		calibrated. Device or ambient temperature is too high.	Lower the device or ambient temperature.
OtE2	[71] EC PT1000 detected OH	The PT1000 temperature sensor is inaccurate or not calibrated. Device or ambient temperature is too high.	Calibrate the sensor through parameter settings. Lower the device or ambient temperature.
E-EIP	[72] EtherNet IP communication timeout	There is no data transmission between the communication card and the host controller (or PLC).	Check whether the communication card wiring is loose or dropped.
E-PAO	[73] No upgrade bootloader	The upgrade bootloader is missing.	Contact us.
E-AI1	[74] AI1 disconnection	Input voltage of AI1 is too low; AI1 wiring is disconnected.	Connect a 5V or 10mA power source to check whether the input is normal; Check the wiring or replace the cables.
E-AI2	[75] AI2 disconnection	Input voltage of AI2 is too low; AI2 wiring is disconnected.	Connect a 5V or 10mA power source to check whether the input is normal; Check the wiring or replace the cables.
E-AI3	[76] AI3 disconnection	Input voltage of AI3 is too low; AI4 wiring is disconnected.	Connect a 5V or 10mA power source to check whether the input is normal; Check the wiring or replace the cables.

7.5.2 Other states

Displayed code	State type	Possible cause	Solution
PoFF	System power failure	The system is powered off or the bus voltage is too low.	Check the grid conditions.

7.6 Analysis on common faults

7.6.1 Motor fails to work

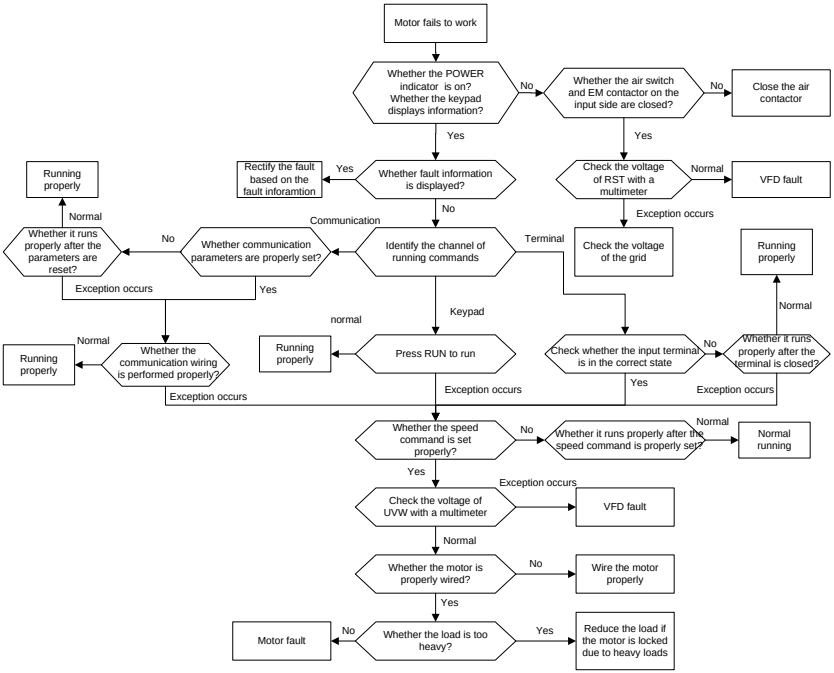

7.6.2 Motor vibrates

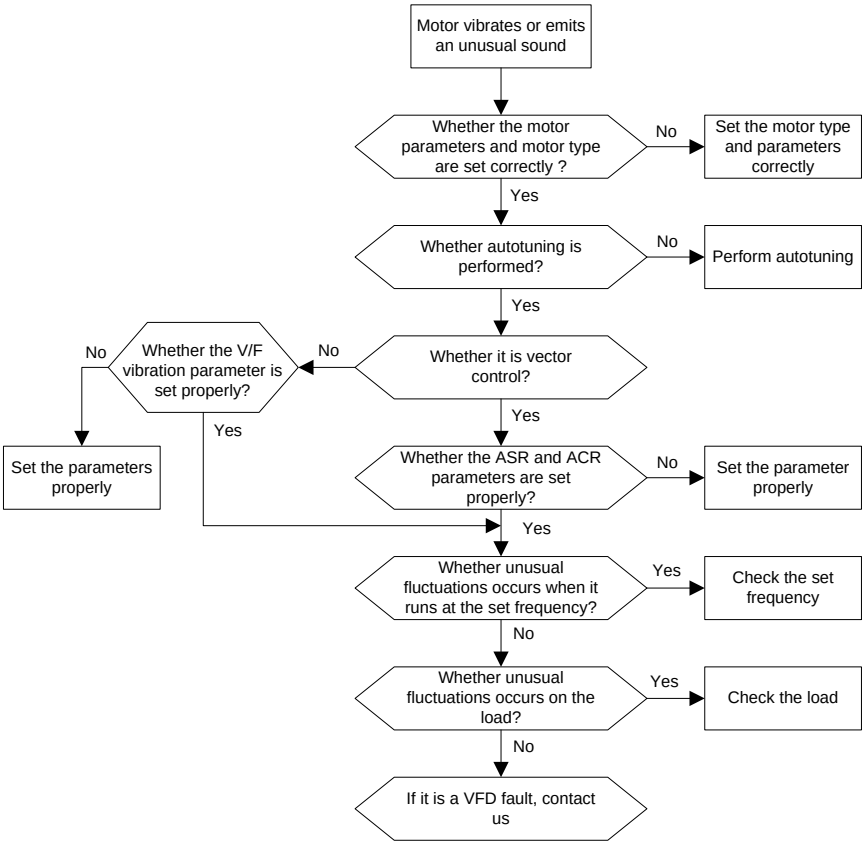

7.6.3 Overvoltage

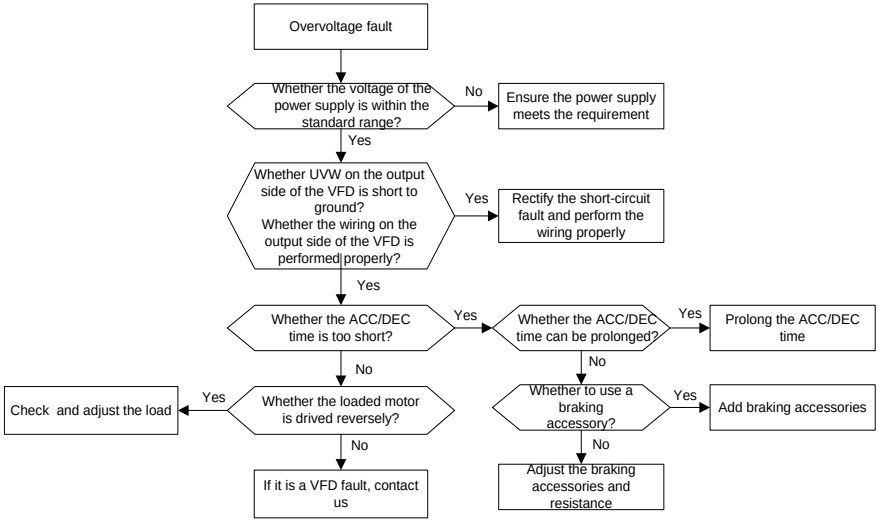

7.6.4 Undervoltage

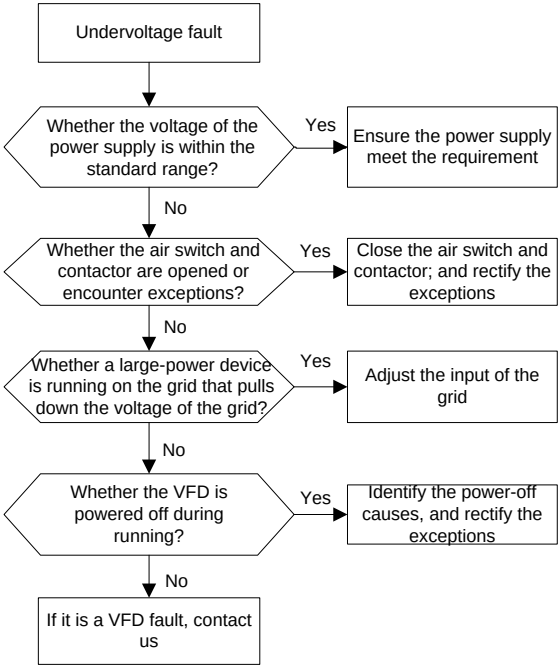

7.6.5 Unusual heating of motor

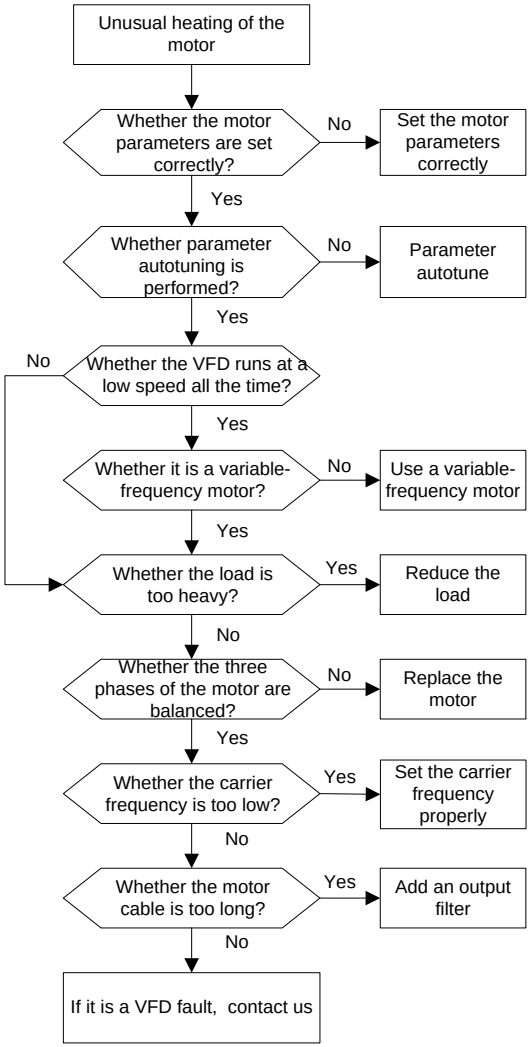

7.6.6 VFD overheating

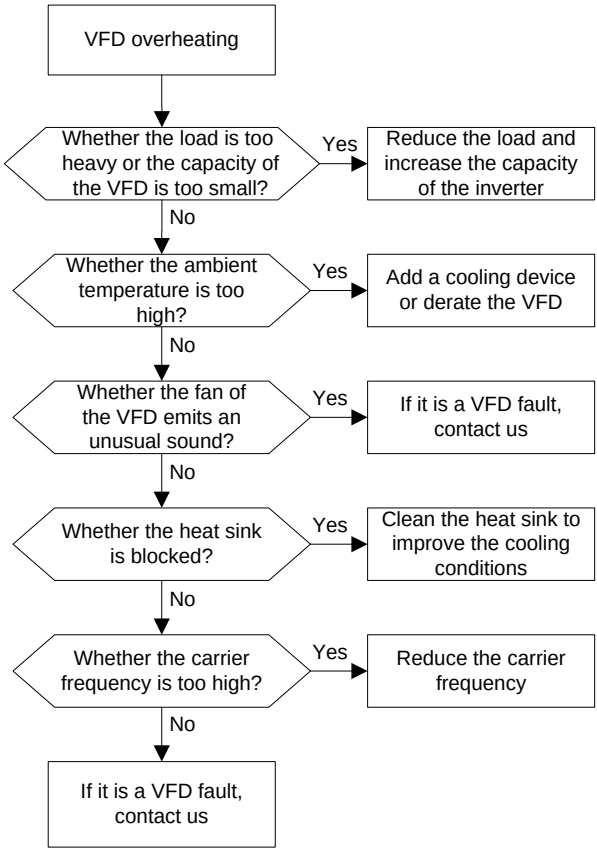

7.6.7 Motor stalls during ACC

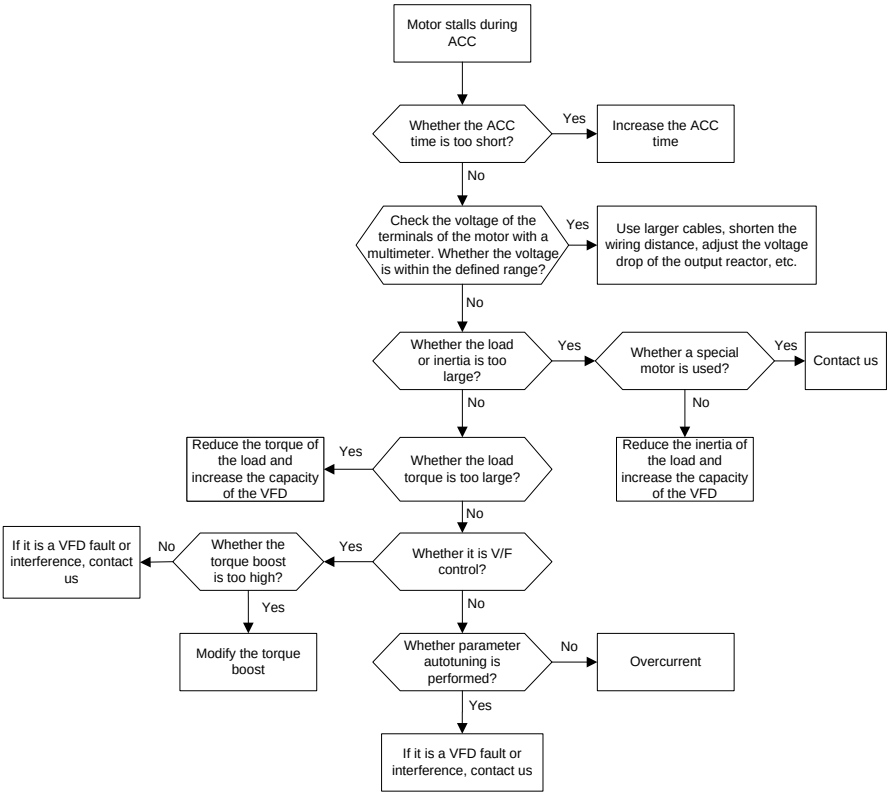

7.6.8 Overcurrent

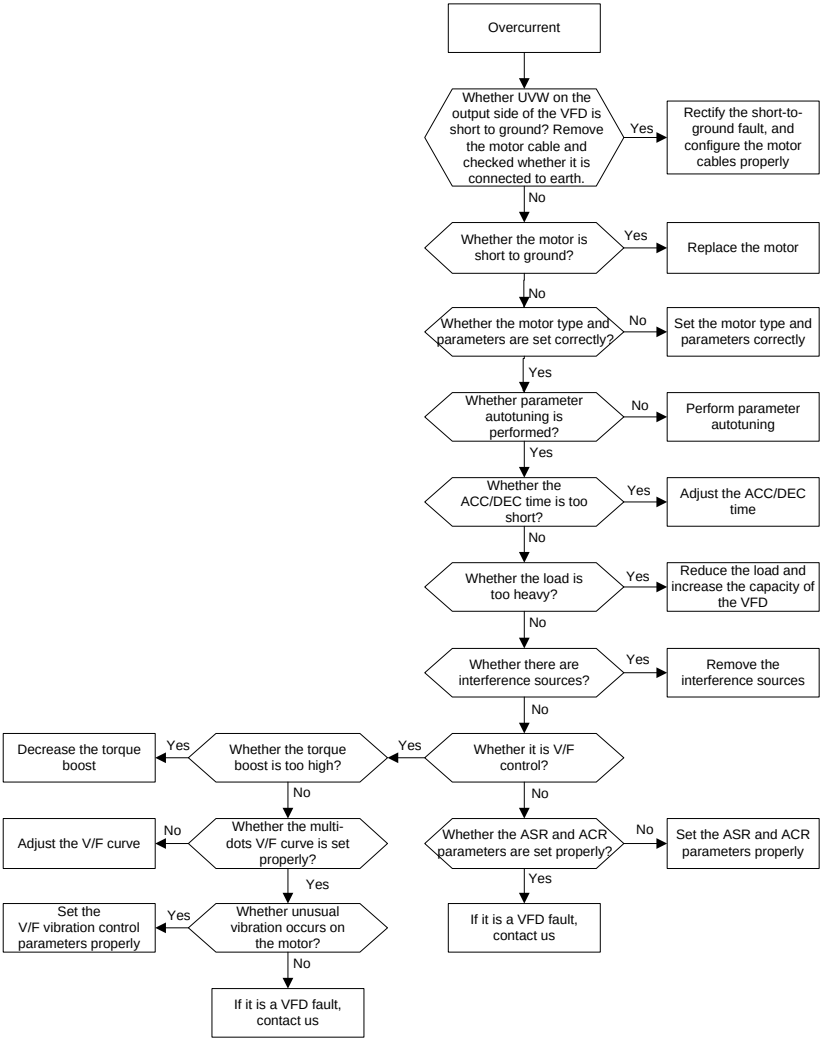

7.7 Countermeasures on common interference

7.7.1 Interference on meter switches and sensors

Interference phenomenon

Pressure, temperature, displacement, and other signals of a sensor are collected and displayed by a human-machine interaction device. The values are incorrectly displayed as follows after the VFD is started:

1. The upper or lower limit is wrongly displayed, for example, 999 or -999.
2. The display of values jumps (usually occurring on pressure transmitters).
3. The display of values is stable, but there is a large deviation, for example, the temperature is dozens of degrees higher than the common temperature (usually occurring on thermocouples).
4. A signal collected by a sensor is not displayed but functions as a drive system running feedback signal. For example, the VFD is expected to decelerate when the upper pressure limit of the compressor is reached, but in actual running, it starts to decelerate before the upper pressure limit is reached.
5. After the VFD is started, the display of all kinds of meters (such as frequency meter and current meter) that are connected to the analog output (AO) terminal of the VFD is severely affected, displaying the values incorrectly.
6. Proximity switches are used. After the VFD is started, the indicator of a proximity switch flickers, and the output level flips.

Solution

1. Check and ensure that the feedback cable of the sensor is 20 cm or farther away from the motor cable.
2. Check and ensure that the ground wire of the motor is connected to the PE terminal of the VFD (if the ground wire of the motor has been connected to the ground block, you need to use a multimeter to measure and ensure that the resistance between the ground block and PE terminal is lower than 1.5 Ω).
3. Try to add a safety capacitor of 0.1 μF to the signal end of the feedback signal terminal of the sensor.
4. Try to add a safety capacitor of 0.1 μF to the power end of the sensor meter (pay attention to the voltage of the power supply and the voltage endurance of the capacitor).
5. For interference on meters connected to the AO terminal of a VFD, if AO uses current signals of 0 to 20 mA, add a capacitor of 0.47 μF between the AO and GND terminals; and if AO uses voltage signals of 0 to 10 V, add a capacitor of 0.1 μF between the AO and GND terminals.

Note:

- When a decoupling capacitor is required, add it to the terminal of the device connected to the sensor. For example, if a thermocouple is to transmit signals of 0 to 20 mA to a temperature meter, the capacitor needs to be added on the terminal of the temperature meter; if an electronic ruler is to transmit signals of 0 to 30 V to a PLC signal terminal, the capacitor needs to be added on the terminal of the PLC.
- If a large number of meters or sensors are disturbed. It is recommended that you configure an external C2 filter on the input power end of the VFD. For models of filters, see the filter model selection section D.7.2 Filter model selection.

7.7.2 Interference on RS485 communication

Interference phenomenon

The interference described in this section on 485 communication mainly includes communication delay, synchronization failure, occasional power-off, or complete power-off that occurs after the VFD is started.

If the communication cannot be implemented properly, regardless of whether the VFD is running, the exception is not necessarily caused by interference. You can find out the causes as follows:

1. Check whether the 485 communication bus is disconnected or in poor contact.
2. Check whether the two ends of line A or B are connected reversely.
3. Check whether the communication protocol (such as the baud rate, data bits, and check bit) of the VFD is consistent with that of the upper computer.

If you are sure that communication exceptions are caused by interference, you can resolve the problem through the following measures:

1. Simple inspection.
2. Arrange the communication cables and motor cables in different cable trays.
3. In multi-VFD application scenarios, adopt the chrysanthemum connection mode to connect the communication cables between VFDs, which can improve the anti-interference capability.
4. In multi-VFD application scenarios, check and ensure that the driving capacity of the master is sufficient.
5. In the connection of multiple VFDs, you need to configure one 120 Ω terminal resistor on each end.

Solution

1. Check and ensure that the ground wire of the motor is connected to the PE terminal of the VFD (if the ground wire of the motor has been connected to the ground block, you need to use a multimeter to measure and ensure that the resistance between the ground block and PE terminal is lower than 1.5 Ω).
2. Do not connect the VFD and motor to the same ground terminal as the upper computer. It is recommended that you connect the VFD and motor to the power ground, and connect the upper computer separately to a ground stud.
3. Try to short the signal reference ground terminal (GND) of the VFD with that of the upper computer controller to ensure that ground potential of the communication chip on the control board of the VFD is consistent with that of the communication chip of the upper computer.
4. Try to short GND of the VFD to its ground terminal (PE).
5. Try to add a safety capacitor of 0.1 μF on the power terminal of the upper computer (PLC, HMI, and touch screen). During this process, pay attention to the voltage of the power supply and the

voltage endurance capability of the capacitor. Alternatively, you can use a magnet ring (Fe-based nanocrystalline magnet rings are recommended). Put the power L/N line or +/- line of the upper computer through the magnet ring in the same direction and wind 8 coils around the magnet ring.

7.7.3 Stop failure and indicator shimmering due to motor cable coupling

Interference phenomenon

1. Stop failure

In a VFD system where an S terminal is used to control the start and stop, the motor cable and control cable are arranged in the same cable tray. After the system is started properly, the S terminal cannot be used to stop the VFD.

2. Indicator shimmering

After a VFD is started, the relay indicator, power distribution box indicator, PLC indicator, and indication buzzer shimmers, blinks, or emits unusual sounds unexpectedly.

Solution

1. Check and ensure that the exception signal cable is arranged 20 cm or farther away from the motor cable.
2. Add a safety capacitor of 0.1 μF between the digital input terminal (S) and the COM terminal.
3. Connect the digital input terminal (S) that controls the start and stop to other idle digital input terminals in parallel. For example, if S1 is used to control the start and stop and S4 is idle, you can try to connect S1 to S4 in parallel.

Note: If the controller (such as PLC) in the system controls more than 5 VFDs at the same time through digital input terminals (S), this scheme is not applicable.

7.7.4 Leakage current and interference on RCD

The VFD outputs high-frequency PWM voltage to drive motors. In this process, the distributed capacitance between the internal IGBT of the VFD and the heat sink and that between the stator and rotor of a motor may inevitably cause the VFD to generate high-frequency leakage current to the ground. A residual current operated protective device (RCD) is used to detect the power-frequency leakage current when a grounding fault occurs on a circuit. The application of the VFD may cause misoperation of a RCD.

1. Rules for selecting RCDs

(1) VFD systems are special. In these systems, it is required that the rated residual current of common RCDs at all levels is larger than 200 mA, and the VFDs are grounded reliably.

(2) For RCDs, the time limit of an action needs to be longer than that of a next action, and the time difference between two actions need to be longer than 20 ms. For example, 1s, 0.5s, and 0.2s.

(3) For circuits in VFD systems, electromagnetic RCDs are recommended. Electromagnetic RCDs have strong anti-interference capability, and thus can prevent the impact of high-frequency leakage current.

Electronic RCD	Electromagnetic RCD
Low cost, high sensitivity, small in volume, susceptible to voltage fluctuation of the grid and ambient temperature, weak anti-interference capability	Requiring highly sensitive, accurate, and stable zero-phase sequence current transformer, using permalloy high-permeability materials, complex process, high cost, not susceptible to voltage fluctuation of the power supply and ambient temperature, strong anti- interference capability

2. Solution to RCD misoperation (handling the VFD)

1. Try to remove the jumper cap at "EMC/J10" on the middle casing of the VFD.

2. Try to reduce the carrier frequency to 1.5 kHz (P00.14=1.5).

3. Try to modify the modulation mode to "3PH modulation and 2PH modulation" (P08.40=0).

3. Solution to RCD misoperation (handling the system power distribution)

(1) Check and ensure that the power cable is not soaking in water.

(2) Check and ensure that the cables are not damaged or spliced.

(3) Check and ensure that no secondary grounding is performed on the neutral wire.

(4) Check and ensure that the main power cable terminal is in good contact with the air switch or contactor (all screws are tightened).

(5) Check 1PH powered devices, and ensure that no earth lines are used as neutral wires by these devices.

Do not use shielded cables as VFD power cables and motor cables.

7.7.5 Live device chassis

After the VFD is started, there is sensible voltage on the chassis, and you may feel an electric shock when touching the chassis. The chassis, however, is not live (or the voltage is far lower than the human safety voltage) when the VFD is powered on but not running.

Solution

1. If there is power distribution grounding or ground stud on the site, ground the cabinet chassis of the drive system through the power ground or stud.

If there is no grounding on the site, you need to connect the motor chassis to the ground terminal PE of the VFD, and ensure that the jumper at "EMC/J10" on the middle casing of the VFD is shorted.

8 Maintenance

8.1 What this chapter contains

This chapter describes how to carry out preventive maintenance on the VFD.

8.2 Periodical inspection

Only little maintenance is required when the VFD is installed in an environment that meets the requirements. The following table describes the routine maintenance periods recommended by INVT.

Subject		Item	Method	Criterion
Ambient environment		Check the temperature, and humidity, and whether there is vibration, dust, gas, oil spray, and water droplets in the environment.	Visual inspection, and use instruments for measurement.	The requirements stated in this manual are met.
		Check whether there are foreign matters, such as tools, or dangerous substances placed nearby.	Visual inspection	There are no tools or dangerous substances placed nearby.
Voltage		Check the voltage of the main circuit and control circuit.	Use multimeters or other instruments for measurement.	The requirements stated in this manual are met.
Keypad		Check the display of information.	Visual inspection	The characters are displayed properly.
		Check whether characters are not completely displayed.	Visual inspection	The requirements stated in this manual are met.
Main circuit	Common	Check whether the bolts loose or come off.	Screw them up.	No exception occurs.
		Check whether the machine is deformed, cracked, or damaged, or their color changes due to overheating and aging.	Visual inspection	No exception occurs.
		Check whether there are stains and dust attached.	Visual inspection	No exception occurs. **Note:** Discoloration of copper bars does not mean that they cannot work

Subject		Item	Method	Criterion
				properly.
	Conductor and wire	Check whether the conductors are deformed or their color change due to overheat.	Visual inspection	No exception occurs.
		Check whether the wire sheaths are cracked or their color changes.	Visual inspection	No exception occurs.
	Terminal block	Check whether there is damage.	Visual inspection	No exception occurs.
	Filter capacitor	Check whether there is electrolyte leakage, discoloration, cracks, and chassis expansion.	Visual inspection	No exception occurs.
		Check whether the safety valves are released.	Determine the service life based on the maintenance information, or measure them through electrostatic capacity.	No exception occurs.
		Check whether the electrostatic capacity is measured as required.	Use instruments to measure the capacity.	Electrostatic capacity ≥ initial value × 0.85
	Resistor	Check whether there is displacement caused due to overheat.	Olfactory and visual inspection	No exception occurs.
		Check whether the resistors are disconnected.	Visual inspection, or remove one end of the connection cable and use a multimeter for measurement.	Resistance range: ±10% (of the standard resistance)
	Transformer and reactor	Check whether there is unusual vibration sounds or smells.	Auditory, olfactory, and visual inspection	No exception occurs.
	Electromagnetic contactor and	Check whether there are vibration sounds in the	Auditory inspection	No exception occurs.

Subject		Item	Method	Criterion
	relay	workshop.		
		Check whether the contacts are in good contact.	Visual inspection	No exception occurs.
Control circuit	Control PCB, connector	Check whether the screws and connectors loose.	Screw them up.	No exception occurs.
		Check whether there is unusual smell or discoloration.	Olfactory and visual inspection	No exception occurs.
		Check whether there are cracks, damage, deformation, or rust.	Visual inspection	No exception occurs.
		Check whether there is electrolyte leakage or deformation.	Visual inspection, and determine the service life based on the maintenance information.	No exception occurs.
Cooling system	Cooling fan	Check whether there are unusual sounds or vibration.	Auditory and visual inspection, and turn the fan blades with your hand.	The rotation is smooth.
		Check whether the bolts loose.	Screw them up.	No exception occurs.
		Check whether there is discoloration caused due to overheat.	Visual inspection, and determine the service life based on the maintenance information.	No exception occurs.
	Ventilation duct	Check whether there are foreign matters blocking or attached to the cooling fan, air inlets, or air outlets.	Visual inspection	No exception occurs.

For more details about maintenance, contact the local INVT office, or visit our website www.invt.com, and choose **Support** > **Services**.

8.3 Cooling fan

The service life of the cooling fan of the VFD is more than 25,000 hours. The actual service life of the cooling fan is related to the use of the VFD and the temperature in the ambient environment.

You can view the running duration of the VFD through P07.14 (Accumulated running time).

The increase of the bearing noise indicates a fan fault. If the VFD is applied in a key position, replace the fan once the fan starts to generate unusual noise. You can purchase spare parts of fans from INVT.

Cooling fan replacement

⚠	✧ Read the safety precautions carefully and follow the instructions to perform operations. Otherwise, physical injuries or damage to the device may be caused.

1. Stop the device, disconnect the AC power supply, and wait for a time no shorter than the waiting time designated on the VFD.
2. Open the cable clamp to loosen the fan cable (for 1.5–30kW VFD models, the middle casing needs to be removed).
3. Remove the fan cable.
4. Remove the fan with a screwdriver.
5. Install a new fan in the VFD in the reverse steps. Assemble the VFD. Ensure that the air direction of the fan is consistent with that of the VFD, as shown in the following figure.

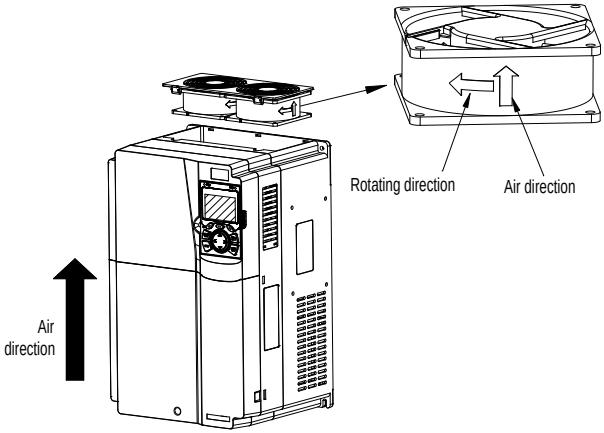

Figure 8–1 Fan maintenance for 7R5G/011P and higher models

6. Power on the VFD.

8.4 Capacitor

8.4.1 Capacitor reforming

If the VFD has been left unused for a long time, you need to follow the instructions to reform the DC bus capacitor before using it. The storage time is calculated from the date the VFD is delivered.

Storage time	Operation instruction
Less than 1 year	No charging operation is required.
1 to 2 years	The VFD needs to be powered on for 1 hour before the first running command.
2 to 3 years	Use a voltage controlled power supply to charge the VFD: Charge the VFD at 25% of the rated voltage for 30 minutes, and then charge it at 50% of the rated voltage for 30 minutes, at 75% for another 30 minutes, and finally charge it at 100% of the rated voltage for 30 minutes.
More than 3 years	Use a voltage controlled power supply to charge the VFD: Charge the VFD at 25% of the rated voltage for 2 hours, and then charge it at 50% of the rated voltage for 2 hours, at 75% for another 2 hours, and finally charge it at 100% of the rated voltage for 2 hours.

The method for using a voltage controlled power supply to charge the VFD is described as follows:

The selection of a voltage controlled power supply depends on the power supply of the VFD. For VFDs with an incoming voltage of 1PH/3PH 230 V AC, you can use a 230 V AC/2 A voltage regulator. Both 1PH and 3PH VFDs can be charged with a 1PH voltage controlled power supply (connect L+ to R, and N to S or T). All the DC bus capacitors share one rectifier, and therefore they are all charged.

For VFDs of a high voltage class, ensure that the voltage requirement (for example, 380 V) is met during charging. Capacitor changing requires little current, and therefore you can use a small-capacity power supply (2 A is sufficient).

The method for using a resistor (incandescent lamp) to charge the drive is described as follows:

If you directly connect the drive device to a power supply to charge the DC bus capacitor, it needs to be charged for a minimum of 60 minutes. The charging operation must be performed at a normal indoor temperature without load, and you must connect a resistor in series mode in the 3PH circuit of the power supply.

For a 380 V drive device, use a resistor of 1 kΩ/100W. If the voltage of the power supply is no higher than 380 V, you can also use an incandescent lamp of 100W. If an incandescent lamp is used, it may go off or the light may become very weak.

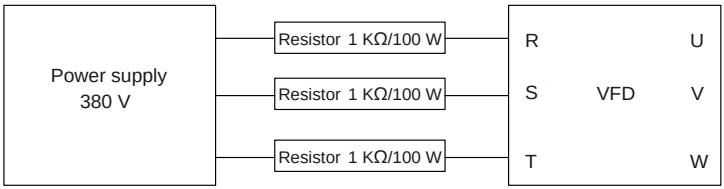

Figure 8–2 Charging circuit example of driving devices

8.4.2 Electrolytic capacitor replacement

⚠	✧ Read the safety precautions carefully and follow the instructions to perform operations. Otherwise, physical injuries or damage to the device may be caused.

The electrolytic capacitor of the VFD must be replaced if it has been used for more than 35,000 hours. For details about the replacement, contact the local INVT office.

8.5 Power cable

⚠	✧ Read the safety precautions carefully and follow the instructions to perform operations. Otherwise, physical injuries or device damage may be caused.

1. Stop the VFD, disconnect the power supply, and wait for a time no shorter than the waiting time designated on the VFD.
2. Check the connection of the power cables. Ensure that they are firmly connected.
3. Power on the VFD.

9 Communication

9.1 What this chapter contains

This chapter describes the communication protocols supported by the VFD.

The VFD provides RS485 communication interfaces and adopts the master/slave communication based on the international standard Modbus communication protocol. You can implement centralized control (setting commands for controlling the VFD, modifying the running frequency and related function parameters, and monitoring the running status and fault information of the VFD) through PC/PLC, upper control computers, or other devices to meet specific application requirements.

9.2 Modbus protocol introduction

Modbus is a software protocol, a common language used in electronic controllers. By using this protocol, a controller can communicate with other devices through transmission lines. It is a general industrial standard. With this standard, control devices produced by different manufacturers can be connected to form an industrial network and be monitored in a centralized way.

The Modbus protocol provides two transmission modes, namely American Standard Code for Information Interchange (ASCII) and Remote Terminal Unit (RTU). On one Modbus network, all the devices must be consistent in transmission modes, baud rates, data bits, check bits, stop bits, and other basic parameters.

A Modbus network is a control network with one master and multiple slaves, that is, on one Modbus network, there is only one device serving as the master, and other devices are the slaves. The master can communicate with one slave or all the slaves by sending broadcast messages. For separate access commands, a slave needs to return a response. For broadcast messages, slaves do not need to return responses.

9.3 Application

The VFD uses the Modbus RTU mode and communicates through RS485 interfaces.

9.3.1 RS485

RS485 interfaces work in half-duplex mode and send data signals in the differential transmission way, which is also referred to as balanced transmission. An RS485 interface uses a twisted pair, in which one wire is defined as A (+), and the other B (-). Generally, if the positive electrical level between the transmission drives A and B ranges from +2 V to +6 V, the logic is "1"; and if it ranges from -2 V to -6 V, the logic is "0". On the VFD terminal block, the 485+ terminal corresponds to A, and 485- corresponds to B.

The communication baud rate (P14.01) indicates the number of bits sent in a second, and the unit is bit/s (bps). A higher baud rate indicates faster transmission and poorer anti-interference capability. When a twisted pair of 0.56mm (24 AWG) is used, the maximum transmission distance varies according to the baud rate, as described in the following table.

Baud rate (bps)	Max. transmission distance (meter)	Baud rate (bps)	Max. transmission distance (meter)
2400BPS	1800m	9600BPS	800m
4800BPS	1200m	19200BPS	600m

When RS485 interfaces are used for long-distance communication, it is recommended that you use shielded cables, and use the shielding layer as the ground wires.

When there are fewer devices and the transmission distance is short, the whole network works well without terminal load resistors. The performance, however, degrades as the distance increases. Therefore, it is recommended that you use a 120Ω terminal resistor when the transmission distance is long.

9.3.1.1 When one VFD is used

Figure 9–1 is the Modbus wiring diagram for the network with one VFD and PC. Generally, PCs do not provide RS485 interfaces, and therefore you need to convert an RS232 or USB interface of a PC to an RS485 interface through a converter. Then, connect end A of the RS485 interface to the 485+ port on the terminal block of the VFD, and connect end B to the 485- port. It is recommended that you use shielded twisted pairs. When an RS232-RS485 converter is used, the cable used to connect the RS232 interface of the PC and the converter cannot be longer than 15 m. Use a short cable when possible. It is recommended that you insert the converter directly into the PC. Similarly, when a USB-RS485 converter is used, use a short cable when possible.

When the wiring is completed, select the correct port (for example, COM1 to connect to the RS232-RS485 converter) for the upper computer of the PC, and keep the settings of basic parameters such as communication baud rate and data check bit consistent with those of the VFD.

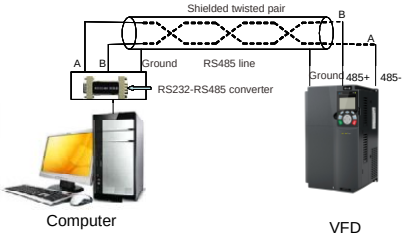

Figure 9–1 RS485 wiring diagram for the network with one VFD

9.3.1.2 When multiple VFDs are used

In the network with multiple VFDs, chrysanthemum connection and star connection are commonly used.

According to the requirements of the RS485 industrial bus standards, all the devices need to be connected in chrysanthemum mode with one 120 Ω terminal resistor on each end, as shown in Figure 9–2. Figure 9–3 is the simplified wiring diagram, and Figure 9–4 is the practical application diagram.

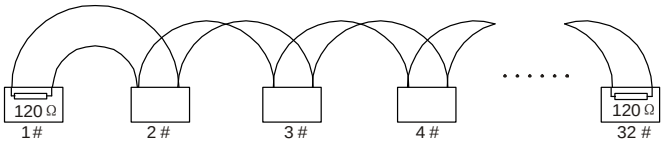

Figure 9–2 Onsite chrysanthemum connection diagram

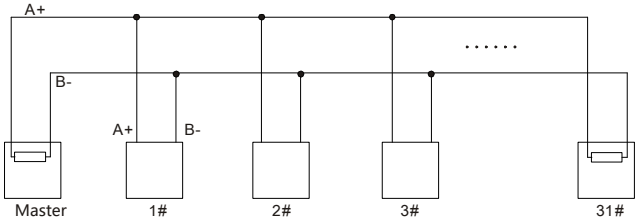

Figure 9–3 Simplified chrysanthemum connection diagram

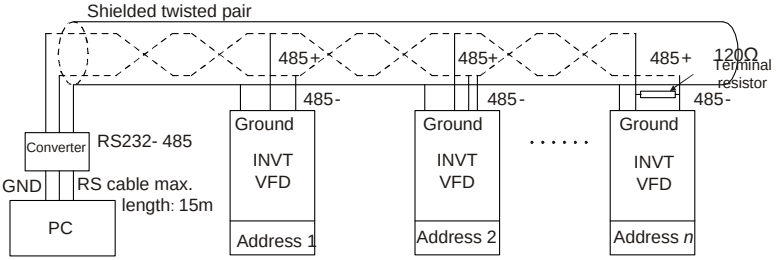

Figure 9–4 Practical application diagram of chrysanthemum connection

Figure 9–5 shows the start connection diagram. When this connection mode is adopted, the two devices that are farthest away from each other on the line must be connected with a terminal resistor (in this figure, the two devices are devices 1# and 15#).

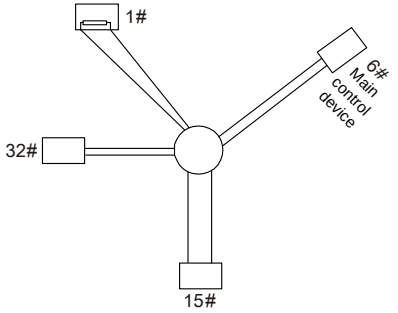

Figure 9–5 Star connection

Use shielded cables, if possible, in multi-VFD connection. The baud rates, data bit check settings,

and other basic parameters of all the devices on the RS485 line must be set consistently, and addresses cannot be repeated.

9.3.2 RTU

9.3.2.1 RTU communication frame structure

When a controller is set to use the RTU communication mode on a Modbus network, every byte (8 bits) in the message includes 2 hexadecimal characters (each includes 4 bits). Compared with the ASCII mode, the RTU mode can help to send more data at the same baud rate.

Code system

- 1 start bit
- 7 or 8 data bits; the minimum valid bit is sent first. Each frame domain of 8 bits includes 2 hexadecimal characters (0–9, A–F).
- 1 odd/even check bit; this bit is not provided if no check is needed.
- 1 stop bit (with check performed), or 2 bits (without check)

Error detection domain

- Cyclic redundancy check (CRC)

The following table describes the data format.

11-bit character frame (Bits 1 to 8 are data bits)

Start bit	BIT1	BIT2	BIT3	BIT4	BIT5	BIT6	BIT7	BIT8	Check bit	Stop bit

10-bit character frame (Bits 1 to 7 are data bits)

Start bit	BIT1	BIT2	BIT3	BIT4	BIT5	BIT6	BIT7	Check bit	Stop bit

In a character frame, only the data bits carry information. The start bit, check bit, and stop bit are used to facilitate the transmission of the data bits to the destination device. In practical applications, you must set the data bits, parity check bits, and stop bits consistently.

In RTU mode, a new frame always must be preceded by a time gap with a minimum length of 3.5 bytes. On a network where the transmission rate is calculated based on the baud rate, the transmission time of 3.5 bytes can be easily obtained. After the idle time ends, the data domains are sent in the following sequence: slave address, operation command code, data, and CRC check character. Each byte sent in each domain includes hexadecimal characters (0–9, A–F). The network devices always monitor the communication bus. After receiving the first domain (address information), each network device identifies the byte. After the last byte is sent, a similar transmission interval (with a minimum length of 3.5 bytes) is used to indicate that the frame transmission ends. Then, the transmission of a new frame starts.

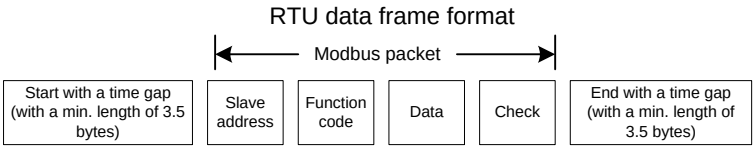

The information of a frame must be sent in a continuous data flow. If there is an interval greater than the transmission time of 1.5 bytes before the transmission of the entire frame is complete, the receiving device deletes the incomplete information, and mistakes the subsequent byte for the address domain of a new frame. Similarly, if the transmission interval between two frames is shorter than the transmission time of 3.5 bytes, the receiving device mistakes it for the data of the last frame. The CRC check value is incorrect due to the disorder of the frames, and thus a communication fault occurs.

The following table describes the standard structure of an RTU frame.

START (frame header)	T1-T2-T3-T4(transmission time of 3.5 bytes)
ADDR (slave address domain)	Communication address: 0–247 (in decimal system) (0 indicates the broadcast address)
CMD (function domain)	03H: read slave parameters 06H: write slave parameters
(Data domain) DATA(N-1) … DATA(0)	Data of 2*N bytes, main content of the communication as well as the core of data exchanging
CRC CHK low-order bits	Detection value: CRC (16 bits)
CRC CHK high-order bits	
END (frame tail)	T1-T2-T3-T4 (transmission time of 3.5 bytes)

9.3.2.2 RTU communication frame error check modes

During the transmission of data, errors may occur due to various factors. Without check, the data receiving device cannot identify data errors and may make a wrong response. The wrong response may cause severe problems. Therefore, the data must be checked.

The check is implemented as follows: The transmitter calculates the to-be-transmitted data based on a specific algorithm to obtain a result, adds the result to the rear of the message, and transmits them together. After receiving the message, the receiver calculates the data based on the same algorithm to obtain a result, and compares the result with that transmitted by the transmitter. If the results are the same, the message is correct. Otherwise, the message is considered wrong.

The error check of a frame includes two parts, namely, bit check on individual bytes (that is, odd/even check using the check bit in the character frame), and whole data check (CRC check).

Bit check on individual bytes (odd/even check)

You can select the bit check mode as required, or you can choose not to perform the check, which will affect the check bit setting of each byte.

Definition of even check: Before the data is transmitted, an even check bit is added to indicate whether the number of "1" in the to-be-transmitted data is odd or even. If it is even, the check bit is set to "0"; and if it is odd, the check bit is set to "1".

Definition of odd check: Before the data is transmitted, an odd check bit is added to indicate whether the number of "1" in the to-be-transmitted data is odd or even. If it is odd, the check bit is set to "0"; and if it is even, the check bit is set to "1".

For example, the data bits to be transmitted are "11001110", including five "1". If the even check is applied, the even check bit is set to "1"; and if the odd check is applied, the odd check bit is set to "0". During the transmission of the data, the odd/even check bit is calculated and placed in the check bit of the frame. The receiving device performs the odd/even check after receiving the data. If it finds that the odd/even parity of the data is inconsistent with the preset information, it determines that a communication error occurs.

Cyclical Redundancy Check (CRC) method

A frame in the RTU format includes an error detection domain based on the CRC calculation. The CRC domain checks all the content of the frame. The CRC domain consists of two bytes, including 16 binary bits. It is calculated by the transmitter and added to the frame. The receiver calculates the CRC of the received frame, and compares the result with the value in the received CRC domain. If the two CRC values are not equal to each other, errors occur in the transmission.

During CRC, 0xFFFF is stored first, and then a process is invoked to process a minimum of 6 contiguous bytes in the frame based on the content in the current register. CRC is valid only for the 8-bit data in each character. It is invalid for the start, end, and check bits.

During the generation of the CRC values, the "exclusive or" (XOR) operation is performed on the each 8-bit character and the content in the register. The result is placed in the bits from the low-order bit to the high-order bit, and 0 is placed in the high-order bit. Then, the low-order bit is detected. If the low-order bit is 1, the XOR operation is performed on the current value in the register and the preset value. If low-order bit is 0, no operation is performed. This process is repeated 8 times. After the last bit (8th bit) is detected and processed, the XOR operation is performed on the next 8-bit byte and the current content in the register. The final values in the register are the CRC values obtained after operations are performed on all the bytes in the frame.

The calculation adopts the international standard CRC check rule. You can refer to the related standard CRC algorithm to compile the CRC calculation program as required.

The following example is a simple CRC calculation function for your reference (using the C programming language):

```
unsigned int crc_cal_value(unsigned char*data_value,unsigned char data_length)
```

```
{
     int i;
     unsigned int crc_value=0xffff;
     while(data_length--)
     {
          crc_value^=*data_value++;
          for(i=0;i<8;i++)
          {
               if(crc_value&0x0001)
                    crc_value=(crc_value>>1)^0xa001;
               else
                    crc_value=crc_value>>1;
          }
     }
     return(crc_value);
}
```

In the ladder logic, CKSM uses the table look-up method to calculate the CRC value according to the content in the frame. The program of this method is simple, and the calculation is fast, but the ROM space occupied is large. Use this program with caution in scenarios where there are space occupation requirements on programs.

9.4 RTU command code and communication data

9.4.1 Command code 03H, reading N words (continuously up to 16 words)

The command code 03H is used by the master to read data from the VFD. The count of data to be read depends on the "data count" in the command. A maximum of 16 pieces of data can be read. The addresses of the read parameters must be contiguous. Each piece of data occupies 2 bytes, that is, one word. The command format is presented using the hexadecimal system (a number followed by "H" indicates a hexadecimal value). One hexadecimal value occupies one byte.

For example, starting from the data address of 0004H, to read two contiguous pieces of data (that is, to read content from the data addresses 0004H and 0005H) of the VFD whose address is 01H, the frame structures are described in the following.

RTU master command (sent from the master to the VFD):

START	T1-T2-T3-T4 (time gap with a min. length of 3.5 bytes)
ADDR (address)	01H
CMD (command code)	03H
Start address high-order bit	00H
Start address low-order bit	04H
Data count high-order bit	00H
Data count low-order bit	02H

CRC low-order bit	85H
CRC high-order bit	CAH
END	T1-T2-T3-T4 (time gap with a min. length of 3.5 bytes)

"START" and "END" are "T1-T2-T3-T4 (time gap with a min. length of 3.5 bytes)", indicating that a time gap with a minimum length of 3.5 bytes must be kept before RS485 communication is executed. The time gap is used to distinguish one message from another so that the two messages are not regarded as one message.

"ADDR" is "01H", indicating that the command is sent to the VFD whose address is 01H. The ADDR information occupies one byte.

"CMD" is "03H", indicating that the command is used to read data from the VFD. The CMD information occupies one byte.

"Start address" indicates that data reading is started from this address. It occupies two bytes, with the high-order bit on the left and low-order bit on the right.

"Data count" indicates the count of data to be read (unit: word). "Start address" is "0004H" and "Data count" is 0002H, indicating that data is to be read from the data addresses of 0004H and 0005H.

CRC check occupies two bytes, with the low-order bit on the left and high-order bit on the right.

RTU slave response (sent from the VFD to the master):

START	T1-T2-T3-T4 (time gap with a min. length of 3.5 bytes)
ADDR	01H
CMD	03H
Number of bytes	04H
High-order bit of data in 0004H	13H
Low-order bit of data in 0004H	88H
High-order bit of data in 0005H	00H
Low-order bit of data in 0005H	00H
CRC low-order bit	7EH
CRC high-order bit	9DH
END	T1-T2-T3-T4 (time gap with a min. length of 3.5 bytes)

The definition of the response information is described as follows:

"ADDR" is "01H", indicating that the message is sent from the VFD whose address is 01H. The ADDR information occupies one byte.

"CMD" is "03H", indicating that the message is a VFD response to the 03H command from the master for reading data. The CMD information occupies one byte.

"Number of bytes" indicates the number of bytes between a byte (not included) and the CRC byte (not

included). The value "04" indicates that there are four bytes of data between "Number of bytes" and "CRC low-order bit", that is, "High-order bit of data in 0004H", "Low-order bit of data in 0004H", "High-order bit of data in 0005H", and "Low-order of data in 0005H".

A piece of data is two bytes, with the high-order bits on the left and low-order bit on the right. From the response, the data in 0004H is 1388H, and that in 0005H is 0000H.

CRC check occupies two bytes, with the low-order bit on the left and high-order bit on the right.

9.4.2 Command word 06H, writing a word

This command is used by the master to write data to the VFD. One command can be used to write only one piece of data. It is used to modify the parameters and running mode of the VFD. For example, to write 5000 (1388H) to 0004H of the VFD whose address is 02H, the frame structures are described in the following.

RTU master command (sent from the master to the VFD):

START	T1-T2-T3-T4 (time gap with a min. length of 3.5 bytes)
ADDR	02H
CMD	06H
High-order bit of data writing address	00H
Low-order bit of data writing address	04H
Data content high-order bit	13H
Data content low-order bit	88H
CRC low-order bit	C5H
CRC high-order bit	6EH
END	T1-T2-T3-T4 (time gap with a min. length of 3.5 bytes)

RTU slave response (sent from the VFD to the master):

START	T1-T2-T3-T4 (time gap with a min. length of 3.5 bytes)
ADDR	02H
CMD	06H
High-order bit of data writing address	00H
Low-order bit of data writing address	04H
Data content high-order bit	13H
Data content low-order bit	88H
CRC low-order bit	C5H
CRC high-order bit	6EH
END	T1-T2-T3-T4 (time gap with a min. length of 3.5 bytes)

Note: Sections 9.4.1 and 9.4.2 mainly describe the command formats. For the detailed application, see section 9.4.8.

9.4.3 Command code 08H, diagnosis

Sub-function code description:

Sub-function code	Description
0000	Return data based on query requests

For example, to query about the circuit detection information about the VFD whose address is 01H, the query and return strings are the same, and the formats are described in the following tables.

RTU master command:

START	T1-T2-T3-T4 (time gap with a min. length of 3.5 bytes)
ADDR	01H
CMD	08H
Sub-function code high-order bit	00H
Sub-function code low-order bit	00H
Data content high-order bit	12H
Data content low-order bit	ABH
CRC CHK low-order bit	ADH
CRC CHK high-order bit	14H
END	T1-T2-T3-T4 (time gap with a min. length of 3.5 bytes)

RTU slave response:

START	T1-T2-T3-T4 (time gap with a min. length of 3.5 bytes)
ADDR	01H
CMD	08H
Sub-function code high-order bit	00H
Sub-function code low-order bit	00H
Data content high-order bit	12H
Data content low-order bit	ABH
CRC CHK low-order bit	ADH
CRC CHK high-order bit	14H
END	T1-T2-T3-T4 (time gap with a min. length of 3.5 bytes)

9.4.4 Command code 10H, continuous writing

The command code 10H is used by the master to write data to the VFD. The quantity of data to be

written is determined by "Data count", and a maximum of 16 pieces of data can be written.

For example, to write 5000 (1388H) and 50 (0032H) respectively to 0004H and 0005H of the VFD whose slave address is 02H, the frame structures are described in the following.

RTU master command (sent from the master to the VFD):

START	T1-T2-T3-T4 (time gap with a min. length of 3.5 bytes)
ADDR	02H
CMD	10H
High-order bit of data writing address	00H
Low-order bit of data writing address	04H
Data count high-order bit	00H
Data count low-order bit	02H
Number of bytes	04H
Content high-order bit of 0004H	13H
Content low-order bit of 0004H	88H
Content high-order bit of 0005H	00H
Content low-order bit of 0005H	32H
CRC low-order bit	C5H
CRC high-order bit	6EH
END	T1-T2-T3-T4 (time gap with a min. length of 3.5 bytes)

RTU slave response (sent from the VFD to the master)

START	T1-T2-T3-T4 (time gap with a min. length of 3.5 bytes)
ADDR	02H
CMD	10H
High-order bit of data writing address	00H
Low-order bit of data writing address	04H
Data count high-order bit	00H
Data count low-order bit	02H
CRC low-order bit	C5H
CRC high-order bit	6EH
END	T1-T2-T3-T4 (time gap with a min. length of 3.5 bytes)

9.4.5 Data address definition

This section describes the address definition of communication data. The addresses are used for controlling the running, obtaining the status information, and setting function parameters of the VFD.

9.4.5.1 Function code address format rules

The address of a function code consists of two bytes, with the high-order bit on the left and low-order bit on the right. The high-order bit ranges from 00 to ffH, and the low-order bit also ranges from 00 to ffH. The high-order bit is the hexadecimal form of the group number before the dot mark, and low-order bit is that of the number behind the dot mark. Take P05.06 as an example: The group number is 05, that is, the high-order bit of the parameter address is the hexadecimal form of 05; and the number behind the dot mark is 06, that is, the low-order bit is the hexadecimal form of 06. Therefore, the function code address is 0506H in the hexadecimal form. For example, the parameter address of P10.01 is 0A01H.

Function code	Name	Description	Setting range	Default	Modify
P10.00	Simple PLC mode	0: Stop after running once 1: Keep running with the final value after running once 2: Cyclic running	0–2	0	○
P10.01	Simple PLC memory selection	0: Without memory after power-off 1: With memory after power-off	0–1	0	○

Note:

- The parameters in the P99 group are set by the manufacturer and cannot be read or modified. Some parameters cannot be modified when the VFD is running; some cannot be modified regardless of the VFD status. Pay attention to the setting range, unit, and description of a parameter when modifying it.
- The service life of the Electrically Erasable Programmable Read-Only Memory (EEPROM) may be reduced if it is frequently used for storage. Some function codes do not need to be stored during communication. The application requirements can be met by modifying the value of the on-chip RAM, that is, modifying the MSB of the corresponding function code address from 0 to 1. For example, if P00.07 is not to be stored in the EEPROM, you need only to modify the value in the RAM, that is, set the address to 8007H. The address can be used only for writing data to the on-chip RAM, and it is invalid when used for reading data.

9.4.5.2 Description of other function addresses

In addition to modifying the parameters of the VFD, the master can also control the VFD, such as starting and stopping it, and monitoring the operation status of the VFD. The following table describes other function parameters.

Function	Address	Data description	R/W
Communication-based control command	2000H	0001H: Forward running	R/W
		0002H: Reverse running	

Function	Address	Data description	R/W
		0003H: Forward jogging	
		0004H: Reverse jogging	
		0005H: Stop	
		0006H: Coast to stop (emergency stop)	
		0007H: Fault reset	
		0008H: Jogging to stop	
Communication-based value setting	2001H	Communication-based frequency setting (0–Fmax, unit: 0.01 Hz)	R/W
	2002H	PID setting, range (0–1000, 1000 corresponding to 100.0%)	
	2003H	PID feedback, range (0–1000, 1000 corresponding to 100.0%)	R/W
	2004H	Torque setting (-3000 – +3000, 1000 corresponding to 100.0% of the motor rated current)	R/W
	2005H	Setting of the upper limit of the forward running frequency (0–Fmax, unit: 0.01 Hz)	R/W
	2006H	Setting of the upper limit of the reverse running frequency (0–Fmax, unit: 0.01 Hz)	R/W
	2007H	Upper limit of the electromotion torque (0–3000, 1000 corresponding to 100.0% of the motor rated current)	R/W
	2008H	Upper limit of the brake torque (0–3000, 1000 corresponding to 100.0% of the motor rated current)	R/W
	2009H	Special control command word: Bit0–1: =00: Motor 1 =01: Motor 2 Bit2: =1 Enable speed/torque control switchover =0: Disable speed/torque control switchover Bit3: =1 Clear electricity consumption =0: Not clear electricity consumption Bit4: =1 Pre-excitation; =0: Disable pre-excitation Bit5: =1 DC brake =0: Disable DC brake	R/W
	200AH	Virtual input terminal command, range: 0x000–0x3FF Corresponding to S8/S7/S6/S5/HDIB/HDIA/S4/ S3/ S2/S1	R/W
	200BH	Virtual output terminal command, range:	R/W

Function	Address	Data description		R/W
		0x00–0x0F Corresponding to local RO2/RO1/HDO/Y1		
	200CH	Voltage setting (used for V/F separation) (0–1000, 1000 corresponding to 100.0% of the motor rated voltage)		R/W
	200DH	AO output setting 1 (-1000–+1000, 1000 corresponding to 100.0%)		R/W
	200EH	AO output setting 2 (-1000–+1000, 1000 corresponding to 100.0%)		R/W
VFD status word 1	2100H	0001H: Forward running		R
		0002H: Reverse running		
		0003H: Stopped		
		0004H: Faulty		
		0005H: POFF		
		0006H: Pre-excited		
VFD status word 2	2101H	Bit0: =0: Not ready to run =1: Ready to run Bi1–2: =00: Motor 1 =01: Motor 2 Bit3: =0: Asynchronous motor =1: Synchronous motor Bit4: =0: No overload alarm =1: Overload alarm Bit5–Bit6: =00: Keypad-based control =01: Terminal-based control =10: Communication-based control Bit7: Reserved Bit8: =0: Speed control =1: Torque control Bit9: =0: Non position control =1: Position control Bit11–Bit10: =0: Vector 0 =1: Vector 1 =2: Closed-loop vector =3: Space voltage vector		R
VFD fault code	2102H	See the description of fault types.		R
VFD identification code	2103H	GD350A-----0x01A2		R
Running frequency	3000H	0–Fmax (Unit: 0.01Hz)	Compatible with CHF100A and CHV100 communication addresses	R
Set frequency	3001H	0–Fmax (Unit: 0.01Hz)		R
Bus voltage	3002H	0.0–2000.0V (Unit: 0.1V)		R
Output voltage	3003H	0–1200V (Unit: 1V)		R
Output current	3004H	0.0–3000.0A (Unit: 0.1A)		R

Function	Address	Data description	R/W
Rotating speed	3005H	0–65535 (Unit: 1rpm)	R
Output power	3006H	-300.0–300.0% (Unit: 0.1%)	R
Output torque	3007H	-250.0–250.0% (Unit: 0.1%)	R
Closed-loop setting	3008H	-100.0–100.0% (Unit: 0.1%)	R
Closed-loop feedback	3009H	-100.0–100.0% (Unit: 0.1%)	R
Input state	300AH	0x00–0x3F Corresponding to the local HDIB/ HDIA/S4/S3/S2/S1	R
Output state	300BH	0x00–0x0F Corresponding to the local RO2/RO1/HDO/Y1	R
Analog input 1	300CH	0.00–10.00V (Unit: 0.01V)	R
Analog input 2	300DH	0.00–10.00V (Unit: 0.01V)	R
Analog input 3	300EH	-10.00–10.00V (Unit: 0.01V)	R
Analog input 4	300FH		R
Read input of HDIA high-speed pulse	3010H	0.00–50.00kHz (Unit: 0.01Hz)	R
Read input of HDIB high-speed pulse	3011H		R
Read current step of multi-step speed	3012H	0–15	R
External length	3013H	0–65535	R
External count value	3014H	0–65535	R
Torque setting	3015H	-300.0–300.0% (Unit: 0.1%)	R
Identification code	3016H		R
Fault code	5000H		R

The Read/Write (R/W) characteristics indicate whether a function can be read and written. For example, "Communication-based control command" can be written, and therefore the command code 6H is used to control the VFD. The R characteristic indicates that a function can only be read, and W indicates that a function can only be written.

Note: Some parameters in the preceding table are valid only after they are enabled. Take the running and stop operations as examples, you need to set "Running command channel" (P00.01) to "Communication", and set "Communication running command channel" (P00.02) to the Modbus communication channel. For another example, when modifying "PID setting", you need to set "PID reference source" (P09.00) to Modbus communication.

The following table describes the encoding rules of device codes (corresponding to the identification code 2103H of the VFD).

Eight high-order bits of code	Meaning	Eight low-order bits of code	Meaning
0x01	GD	0x08	GD35 vector VFD
		0x09	GD35-H1 vector VFD
		0x0a	GD300 vector VFD
		0xa0	GD350 vector VFD
		0xa1	GD350-UL vector VFD
		0xa2	GD350A vector VFD

9.4.6 Fieldbus scale

In practical applications, communication data is represented in the hexadecimal form, but hexadecimal values cannot represent decimals. For example, 50.12 Hz cannot be represented in the hexadecimal form. In such cases, we can multiply 50.12 by 100 to obtain an integer 5012, and then 50.12 can be represented as 1394H (5012 in the decimal form) in the hexadecimal form.

In the process of multiplying a non-integer by a multiple to obtain an integer, the multiple is referred to as a fieldbus scale.

The fieldbus scale depends on the number of decimals in the value specified in "Detailed parameter description" or "Default value". If there are *n* decimals in the value, the fieldbus scale m is the nth-power of 10. Take the following table as an example, m is 10.

Function code	Name	Description	Setting range	Default	Modify
P01.20	Wake-up-from-sleep delay	0.0–3600.0s (valid when ones place of P01.19 is 2)	0.00–3600.0	0.0s	○
P01.21	Restart after power failure	0: Disable 1: Enable	0–1	0	○

The value specified in "Setting range" or "Default" contains one decimal, so the fieldbus scale is 10. If the value received by the upper computer is 50, the value of "Wake-up-from-sleep delay" of the VFD is 5.0 (5.0=50/10).

To set the "Wake-up-from-sleep delay" to 5.0s through Modbus communication, you need first to multiply 5.0 by 10 according to the scale to obtain an integer 50, that is, 32H in the hexadecimal form, and then transmit the following write command:

01	**06**	**01 14**	**00 32**	**49 E7**
VFD address	Write command	Parameter address	Parameter data	CRC

After receiving the command, the VFD converts 50 into 5.0 based on the fieldbus scale, and then sets

"Wake-up-from-sleep delay" to 5.0s.

For another example, after the upper computer transmits the "Wake-up-from-sleep delay" parameter read command, the master receives the following response from the VFD:

01	03	02	00 32	39 91
VFD address	Read command	2-byte data	Parameter data	CRC

The parameter data is 0032H, that is, 50, so 5.0 is obtained based on the fieldbus scale (50/10=5.0). In this case, the master identifies that the "Wake-up-from-sleep delay" is 5.0s.

9.4.7 Error message response

Operation errors may occur in communication-based control. For example, some parameters can only be read, but a write command is transmitted. In this case, the VFD returns an error message response.

Error message responses are sent from the VFD to the master. The following table describes the codes and definitions of the error message responses.

Code	Name	Description
01H	Invalid command	The command code received by the upper computer is not allowed to be executed. The possible causes are as follows: • The function code is applicable only on new devices and is not implemented on this device. • The slave is in the faulty state when processing this request.
02H	Invalid data address	For the VFD, the data address in the request of the upper computer is not allowed. In particular, the combination of the register address and the number of the to-be-transmitted bytes is invalid.
03H	Invalid data value	The received data domain contains a value that is not allowed. The value indicates the error of the remaining structure in the combined request. **Note:** It does not mean that the data item submitted for storage in the register includes a value unexpected by the program.
04H	Operation failure	The parameter is set to an invalid value in the write operation. For example, a function input terminal cannot be set repeatedly.
05H	Password error	The password entered in the password verification address is different from that set in P07.00.
06H	Data frame error	The length of the data frame transmitted by the upper computer is incorrect, or in the RTU format, the value of the CRC check bit is inconsistent with the CRC value calculated by the lower computer.
07H	Parameter read-only	The parameter to be modified in the write operation of the upper computer is a read-only parameter.

Code	Name	Description
08H	Parameter cannot be modified in running	The parameter to be modified in the write operation of the upper computer cannot be modified during the running of the VFD.
09H	Password protection	A user password is set, and the upper computer does not provide the password to unlock the system when performing a read or write operation. The error of "system locked" is reported.

When returning a response, the slave device uses a function code domain and fault address to indicate whether it is a normal response (no error) or exception response (some errors occur). In a normal response, the device returns the corresponding function code and data address or sub-function code. In an exception response, the device returns a code that is equal to a normal code, but the first bit is logic 1.

For example, if the master device transmits a request message to a slave device for reading a group of function code address data, the code is generated as follows:

0 0 0 0 0 0 1 1 (03H in the hexadecimal form)

For an exception response, the following code is returned:

1 0 0 0 0 0 1 1 (83H in the hexadecimal form)

In addition to the modification of the code, the slave device returns a byte of exception code that describes the cause of the exception. After receiving the exception response, the typical processing of the master device is to transmit the request message again or modify the command based on the fault information.

For example, to set the "Channel of running commands" (P00.01, the parameter address is 0001H) of the VFD whose address is 01H to 03, the command is as follows:

01	**06**	**00 01**	**00 03**	**98 0B**
VFD address	Write command	Parameter address	Parameter data	CRC

However, the setting range of the "Running command channel" is 0 to 2. The value 3 exceeds the setting range. In this case, the VFD returns an error message response as shown in the following:

01	**86**	**04**	**43 A3**
VFD address	Exception response code	Error code	CRC

The exception response code 86H (generated based on the highest-order bit "1" of the write command 06H) indicates that it is an exception response to the write command (06H). The error code is 04H. From the preceding table, we can see that it indicates the error "Operation failure", which means "The parameter is set to an invalid value in the write operation".

9.4.8 Read/Write operation example

For details about the formats of the read and write commands, see sections 9.4.1 and 9.4.2.

9.4.8.1 Examples of read command 03H

Example 1: Read status word 1 of the VFD whose address is 01H. According to the table of other function addresses, the parameter address of status word 1 of the VFD is 2100H.

The read command transmitted to the VFD is as follows:

01	03	21 00	00 01	8E 36
VFD address	Read command	Parameter address	Data quantity	CRC

Assume that the following response is returned:

01	03	02	00 03	F8 45
VFD address	Read command	Number of bytes	Data content	CRC

The data content returned by the VFD is 0003H, which indicates that the VFD is in the stopped state.

Example 2: View information about the VFD whose address is 03H, including "Present fault type" (P07.27) to "5th-last fault type" (P07.32) of which the parameter addresses are 071BH to 0720H (contiguous 6 parameter addresses starting from 071BH).

The command transmitted to the VFD is as follows:

03	03	07 1B	00 06	B5 59
VFD address	Read command	Start address	6 parameters in total	CRC

Assume that the following response is returned:

03	03	0C	00 23	00 23	00 23	00 23	00 23	00 23	5F D2
VFD address	Read command	Number of bytes	Present fault type	Last fault type	2nd-last fault type	3rd-last fault type	4th-last fault type	5th-last fault type	CRC

According to the returned data, all the fault types are 0023H, that is, 35 in the decimal form, which means the maladjustment fault (STo)

9.4.8.2 Examples of write command 06H

Example 1: Set the VFD whose address is 03H to be forward running. Refer to the table of other function parameters, the address of "Communication-based control command" is 2000H, and 0001H indicates forward running.

Function	Address	Data description	R/W
Communication-based control command	2000H	0001H: Forward running	R/W
		0002H: Reverse running	
		0003H: Forward jogging	
		0004H: Reverse jogging	
		0005H: Stop	
		0006H: Coast to stop (emergency stop)	
		0007H: Fault reset	
		0008H: Jogging to stop	

The command transmitted by the master is as follows:

03	06	20 00	00 01	42 28
VFD address	Write command	Parameter address	Forward running	CRC

If the operation is successful, the following response is returned (same as the command transmitted by the master):

03	06	20 00	00 01	42 28
VFD address	Write command	Parameter address	Forward running	CRC

Example 2: Set the "Max. output frequency" of the VFD whose address is 03H to 100 Hz.

Function code	Name	Description	Default	Modify
P00.03	Max. output frequency	Max (P00.04, 10.00)–590.00Hz	50.00Hz	◎

According to the number of decimals, the fieldbus scale of the "Max. output frequency" (P00.03) is 100. Multiply 100 Hz by 100. The value 10000 is obtained, and it is 2710H in the hexadecimal form.

The command transmitted by the master is as follows:

03	06	00 03	27 10	62 14
VFD address	Write command	Parameter address	Parameter data	CRC

If the operation is successful, the following response is returned (same as the command transmitted by the master):

03	06	00 03	27 10	62 14
VFD address	Write command	Parameter address	Parameter data	CRC

Note: In the preceding command description, spaces are added to a command just for explanatory purposes. In practical applications, no space is required in the commands.

9.4.8.3 Examples of continuously write command 10H

Example 1: Set the VFD whose address is 01H to be forward running at the frequency of 10 Hz. Refer to the table of other function parameters, the address of "Communication-based control command" is 2000H, 0001H indicates forward running, and the address of "Communication-based value setting" is 2001H, as shown in the following figure. 10 Hz is 03E8H in the hexadecimal form.

Function	Address	Data description	R/W
Communication-based control command	2000H	0001H: Forward running	R/W
		0002H: Reverse running	
		0003H: Forward jogging	
		0004H: Reverse jogging	
		0005H: Stop	
		0006H: Coast to stop (emergency stop)	
		0007H: Fault reset	
		0008H: Jogging to stop	
Communication-based value setting	2001H	Communication-based frequency setting (0–Fmax, unit: 0.01 Hz)	R/W
	2002H	PID setting, range (0–1000, 1000 corresponding to 100.0%)	

In the actual operation, set P00.01 to 2 and P00.06 to 8.

The command transmitted by the master is as follows:

01	10	20 00	00 02	04	00 01	03 E8	3B 10
VFD address	Continuous write command	Parameter address	Parameter quantity	Number of bytes	Froward running	10 Hz	CRC

If the operation is successful, the following response is returned:

01	10	20 00	00 02	4A 08
VFD address	Continuous write command	Parameter address	Parameter quantity	CRC

Example 2: Set "ACC time" of the VFD whose address is 01H to 10s, and "DEC time" to 20s.

P00.11	ACC time 1	Setting range of P00.11 and P00.12: 0.0–3600.0s	Model depended	○

P00.12	DEC time 1		Model depended	○

The address of P00.11 is 000B, 10s is 0064H in the hexadecimal form, and 20s is 00C8H in the hexadecimal form.

The command transmitted by the master is as follows:

01	10	00 0B	00 02	04	00 64	00 C8	F2 55
VFD address	Continuous write command	Parameter address	Parameter quantity	Number of bytes	10s	20s	CRC

If the operation is successful, the following response is returned:

01	10	00 0B	00 02	30 0A
VFD address	Continuous write command	Parameter address	Parameter quantity	CRC

Note: In the preceding command description, spaces are added to a command just for explanatory purposes. In practical applications, no space is required in the commands.

9.4.8.4 Modbus communication commissioning example

A PC is used as the host, an RS232-RS485 converter is used for signal conversion, and the PC serial port used by the converter is COM1 (an RS232 port). The upper computer commissioning software is the serial port commissioning assistant Commix, which can be downloaded from the Internet. Download a version that can automatically execute the CRC check function. The following figure shows the interface of Commix.

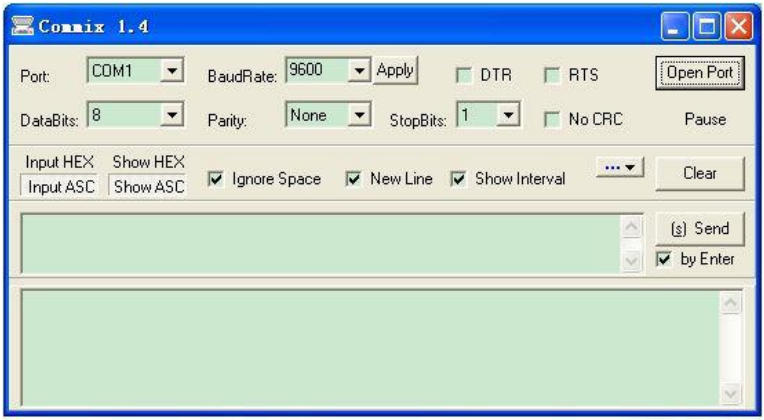

First, set the serial port to **COM1**. Then, set the baud rate consistently with P14.01. The data bits, check bits, and end bits must be set consistently with P14.02. If the RTU mode is selected, you need

to select the hexadecimal form **Input HEX**. To set the software to automatically execute the CRC function, you need to select **ModbusRTU**, select **CRC16 (MODBU SRTU)**, and set the start byte to **1**. After the auto CRC check function is enabled, do not enter CRC information in commands. Otherwise, command errors may occur due to repeated CRC check.

The commissioning command to set the VFD whose address is 03H to be forward running is as follows:

03	06	20 00	00 01	42 28
VFD address	Write command	Parameter address	Forward running	CRC

Note:

Set the address (P14.00) of the VFD to 03.

Set "Channel of running commands" (P00.01) to "Communication", and set "Communication channel of running commands" (P00.02) to the Modbus communication channel.

Click **Send**. If the line configuration and settings are correct, a response transmitted by the VFD is received as follows:

03	06	20 00	00 01	42 28
VFD address	Write command	Parameter address	Forward running	CRC

9.5 Common communication faults

Common communication faults include the following:

- No response is returned.
- The VFD returns an exception response.

Possible causes of no response include the following:

- The serial port is set incorrectly. For example, the converter uses the serial port COM1, but COM2 is selected for the communication.
- The settings of the baud rates, data bits, end bits, and check bits are inconsistent with those set on the VFD.
- The positive pole (+) and negative pole (-) of the RS485 bus are connected reversely.
- The resistor connected to RS485 terminals on the terminal block of the VFD is set incorrectly.

Appendix A Expansion cards

A.1 Model definition

EC-PG 5 02-05 B

① ② ③④ ⑤ ⑥

Field	Field description	Naming example
①	Product category	EC: Expansion card
②	Card category	IC: IoT card IO: IO card PC: Programmable card PG: PG card PS: Power supply card TX: Communication card
③	Technical version	Indicates the generation of technical version by using an odd number. For example, 1, 3, 5, and 7 indicate the 1st, 2nd, 3rd and 4th generations of technical version.
④	Distinguishing code	02: Sine/Cosine PG card + pulse direction setting + frequency-divided output
		03: UVW PG interface + pulse direction setting + frequency-divided output
		04: Resolver PG interface + pulse direction setting + frequency-divided output
		05: Incremental PG card + pulse direction setting + frequency-divided output
		06: Absolute PG interface + pulse direction setting + frequency-divided output
		07: Simple incremental PG card
⑤	Working power	00: Passive
		05: 5V
		12: 12–15 V
		24: 24 V
⑥	Expansion card version	Empty: Version A B: Version B C: Version C

EC-PC 5 02-00

① ② ③ ④ ⑤

Field	Field description	Naming example
①	Product category	EC: Expansion card
②	Card category	IC: IoT card IO: IO card PC: Programmable card PG: PG card PS: Power supply card TX: Communication card
③	Technical version	Indicates the generation of technical version by using an odd number. For example, 1, 3, 5, and 7 indicate the 1st, 2nd, 3rd and 4th generations of technical version.
④	Distinguishing code	01: 10 points, with 6 inputs and 4 outputs (2 transistor outputs + 2 relay outputs)
		02: 8 points of IO, 1 point of AI, 1 point of AO, and 1 point of RS485 communication
		03: Reserved
⑤	Special requirement	Reserved. The default value is 00.

EC-TX 5 01 B

① ② ③ ④ ⑤

Field	Field description	Naming example
①	Product category	EC: Expansion card
②	Card category	IC: IoT card IO: IO card PC: Programmable card PG: PG card PS: Power supply card TX: Communication card
③	Technical version	Indicates the generation of technical version by using an odd number. For example, 1, 3, 5, and 7 indicate the 1st, 2nd, 3rd and 4th generations of

Field	Field description	Naming example
		technical version.
④	Distinguishing code	01: Bluetooth communication card
		02: WIFI communication card
		03: PROFIBUS communication card
		04: Ethernet communication card
		05: CAN multi-protocol communication card
		06: DeviceNet communication card
		07: BACnet communication card
		08: EtherCAT communication card
		09: PROFINET communication card
		10: EtherNet/IP communication card
		15: Modbus TCP communication card
⑤	Expansion card version	Empty: Version A B: Version B C: Version C

EC-IO 5 01-00

① ② ③ ④ ⑤

Field	Field description	Naming example
①	Product category	EC: Expansion card
②	Card category	IC: IoT card IO: IO card PC: Programmable card PG: PG card PS: Power supply card TX: Communication card
③	Technical version	Indicates the generation of technical version by using an odd number. For example, 1, 3, 5, and 7 indicate the 1st, 2nd, 3rd and 4th generations of technical version.
④	Distinguishing code	01: Multiple-function I/O expansion card (4 digital inputs, 1 digital output, 1 analog input, 1 analog output, and 2 relay outputs)
		02: Digital I/O card

Field	Field description	Naming example
		03: Analog I/O card
		04: Reserved
		05: Reserved
⑤	Special requirement	

EC - IC 5 01 - 2 1 G
① ② ③ ④ ⑤ ⑥ ⑦

Field	Field description	Naming example
①	Product category	EC: Expansion card
②	Card category	IC: IoT card IO: IO card PC: Programmable card PG: PG card PS: Power supply card TX: Communication card
③	Technical version	Indicates the generation of technical version by using an odd number. For example, 1, 3, 5, and 7 indicate the 1st, 2nd, 3rd and 4th generations of technical version.
④	Distinguishing code	01: GPRS card 02: 4G card 03: Reserved
⑤	Antenna type	1: Internal 2: External
⑥	SIM card type	0: Plug-in (standard) 1: Surface mounted **Note:** When this field is 0 or omitted, the SIM card type is plug-in.
⑦	Special requirement	G: With GPS S: Surface mounted SIM card **Note:** When this field is omitted, the expansion card does not have special functions.

EC – IC 5 02 - 2 1 G - CN
① ② ③ ④ ⑤ ⑥ ⑦ ⑧

Field	Field description	Naming example
①	Product category	EC: Expansion card
②	Card category	IC: IoT card IO: IO card PC: Programmable card PG: PG card PS: Power supply card TX: Communication card
③	Technical version	Indicates the generation of technical version by using an odd number. For example, 1, 3, 5, and 7 indicate the 1st, 2nd, 3rd and 4th generations of technical version.
④	Distinguishing code	01: GPRS card
		02: 4G card
		03: Reserved
⑤	Antenna type	1: Built-in
		2: External
⑥	SIM card type	0: Plug-in 1: Surface mounted **Note:** When this filed is 0 or omitted, the SIM card type is plug-in.
⑦	Special function	G: GPS function **Note:** When this field is omitted, the expansion card does not have special functions
⑧	International version	CN: China version EU: Europe version LA: Latin America version **Note:** A 4G SIM card is a standard configuration for the CN version, but not for the EU or LA version.

The following table describes expansion cards that the VFD supports. The expansion cards are optional and need to be purchased separately.

Name	Model	Specification
IO expansion card	EC-IO501-00	✧ 4 digital inputs ✧ 1 digital output ✧ 1 analog input ✧ 1 analog output ✧ 2 relay outputs: 1 double-contact output, and 1 single-contact output
IO expansion card 2	EC-IO502-00	✧ 4 digital inputs

Name	Model	Specification
		✧ 1 PT100 ✧ 1 PT1000 ✧ 2 relay outputs: single-contact output
Programmable expansion card	EC-PC502-00	✧ Adopting the global mainstream development environment PLC, supporting multiple types of programming languages, such as the instruction language, structural text, function block diagram, ladder diagram, continuous function chart, and sequential function chart ✧ Supporting breakpoint commissioning and periodic task run mode selection ✧ Providing user program storage space of 16K steps, and data storage space of 8K words ✧ 6 digital inputs ✧ 2 relay outputs ✧ 1 AI and 1 AO ✧ 1 RS485 communication channel, supporting the host controller to switch the master/slave ✧ Saving data of 1K words at power down
Bluetooth communication card	EC-TX501-1 EC-TX501-2	✧ Supporting Bluetooth 4.0 ✧ With INVT's mobile phone APP, you can set the parameters and monitor the states of the VFD through Bluetooth ✧ The maximum communication distance in open environments is 30 m. ✧ EC-TX501-1 is equipped with a built-in antenna and applicable to molded case machines. ✧ EC-TX501-2 is configured with an external sucker antenna and applicable to sheet metal machines.
WIFI communication card	EC-TX502-1 EC-TX502-2	✧ Meeting IEEE802.11b/g/n ✧ With INVT's mobile phone APP, you can monitor the VFD locally or remotely through WIFI communication ✧ The maximum communication distance in open environments is 30 m. ✧ EC-TX501-1 is equipped with a built-in antenna and applicable to molded case machines. ✧ EC-TX501-2 is configured with an external sucker antenna and applicable to sheetmetal machines.

Name	Model	Specification
PROFIBUS-DP communication card	EC-TX503	✧ Supporting the PROFIBUS-DP protocol
Ethernet communication card	EC-TX504	✧ Supporting Ethernet communication with INVT's internal protocol ✧ Can be used in combination with INVT's upper computer monitoring software INVT Workshop
CAN multi-protocol communication card	EC-TX505C	✧ Based on the CAN2.0A and CAN2.0B physical layer ✧ Supporting the CANopen protocol ✧ Adopting INVT's master-slave control proprietary protocol
PROFINET communication card	EC-TX509	✧ Supporting the PROFINET protocol
Ethernet/IP communication card	EC-TX510	✧ Supporting the Ethernet IP protocol and ODVA protocol ✧ With two Ethernet IP ports, supporting 10/100M half/full duplex operating ✧ Supporting star, line, and ring network topologies (but not supporting ring network monitoring)
Modbus TCP communication card	EC-TX515	✧ With two Modbus TCP IO ports, supporting 100M full duplex operating, and supporting line and star network topologies, with the nodes up to 32 ✧ Able to function as a Modbus TCP slave
Sin/Cos PG card	EC-PG502	✧ Applicable to Sin/Cos encoders with or without CD signals ✧ Supporting A, B, Z frequency-divided output ✧ Supporting input of pulse train reference
UVW incremental PG card	EC-PG503-05	✧ Applicable to 5V differential encoders ✧ Supporting A, B, Z orthogonal input ✧ Supporting U, V, W 3PH pulse input ✧ Supporting A, B, Z frequency-divided output ✧ Supporting input of pulse train reference
Resolver PG card	EC-PG504-00	✧ Applicable to resolver encoders ✧ Supporting simulated A, B, Z frequency-divided output of resolvers ✧ Supporting input of pulse train reference
Multi-function incremental PG card	EC-PG505-12	✧ Applicable to OC encoders of 5 V or 12 V ✧ Applicable to push-pull encoders of 5 V or 12 V

Name	Model	Specification
		✧ Applicable to differential encoders of 5 V ✧ Supporting the orthogonal input of A, B, and Z ✧ Supporting the frequency-divided output of A, B, and Z ✧ Supporting pulse train setting
24V incremental PG card	EC-PG505-24B	✧ Applicable to 24V OC encoders ✧ Applicable to 24 V push-pull encoders ✧ Supporting A, B, Z orthogonal input ✧ Supporting A, B, Z frequency-divided output ✧ Supporting pulse train reference input
Simple incremental PG card	EC-PG507-12	✧ Applicable to 5 V or 12 V OC encoders ✧ Applicable to 5 V or 12 V push-pull encoders ✧ Applicable to 5 V differential encoders
24V simplified incremental PG card	EC-PG507-24	✧ Applicable to 24 V OC encoders ✧ Applicable to 24 V push-pull encoders ✧ Applicable to 24 V differential encoders
GPRS card	EC–IC501-2	✧ Supporting IoT monitoring ✧ Supporting remote VFD upgrade
4G card	EC-IC502-2-CN EC-IC502-2-EU EC-IC502-2-LA	✧ Supporting standard RS485 interfaces ✧ Supporting 4G communication

Remarks: Contact us for details about the EtherCAT communication card, 24V power supply card, and the shockproof GPRS card with high-precision GPS positioning.



IO expansion card
EC-IO501-00



IO expansion card 2
EC-IO502-00



Programmable expansion card
EC-PC502-00



Bluetooth/WIFI communication card
EC-TX501/502



PROFIBUS-DP communication card
EC-TX503



Ethernet communication card
EC-TX504



CAN multi-protocol communication card
EC-TX505C



PROFINET communication card
EC-TX509



Ethernet/IP communication card
EC-TX510/Modbus TCP communication card
EC-TX515



Sin/Cos PG card
EC-PG502



UVW incremental PG card
EC-PG503-05



Resolver PG card
EC-PG504-00



Multifunction incremental PG card
EC-PG505-12



24V incremental PG card
EC-PG505-24B



Simplified incremental PG card
EC-PG507-12

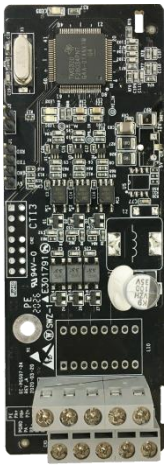

24V simplified incremental PG card
EC-PG507-24



GPRS card
EC–IC501-2



4G card
EC-IC502-2-CN
EC-IC502-2-EU
EC-IC502-2-LA

A.2 Dimensions and installation

All expansion cards are of the same dimensions (108 mm × 39 mm) and can be installed in the same way.

Comply with the following operation principles when installing or removing an expansion card:

1. Ensure that no power is applied before installing an expansion card.
2. An expansion card can be installed into a respective card slot among SLOT1, SLOT2, and SLOT3.
3. VFDs of 5.5 kW or lower can be configured with two expansion cards at the same time, and those of 7.5 kW or higher can be configured with three expansion cards.
4. If interference occurs on the external wires after expansion cards are installed, change their installation card slots flexibly to facilitate the wiring. For example, the connector of the connection cable of the DP card is large, so it is recommended to be installed in the SLOT1 card slot.
5. To ensure high anti-interference capability in closed-loop control, you need to use a shielding wire in the encoder cable and ground the two ends of the shielding wire, that is, connect the shielding layer to the housing of the motor on the motor side, and connect the shielding layer to the PE terminal on the PG card side.

Note: For 2.2–5.5kW models, the 24V power suply card can be inserted into SLOT1; for 7.5kW and higher models, the 24V power supply card can be inserted into SLOT1 or SLOT3; for 11kW and higher models, the 24V power supply card can be inserted into any of the three slots.

Figure A–1 shows the installation diagram and a VFD with expansion cards installed.

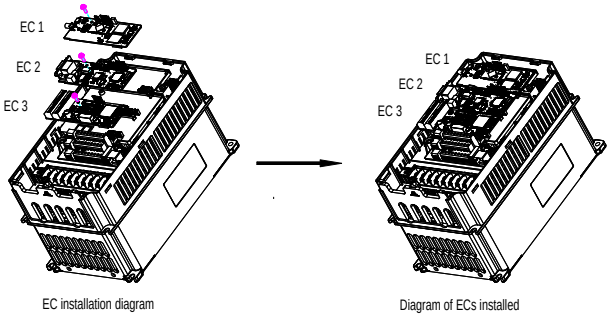

Figure A–1 VFD of 7.5 kW or higher with expansion cards installed

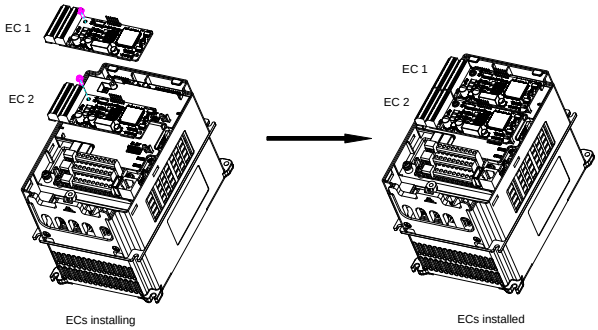

Figure A–2 VFD of 5.5 kW or lower with expansion cards installed

Expansion card installation process:

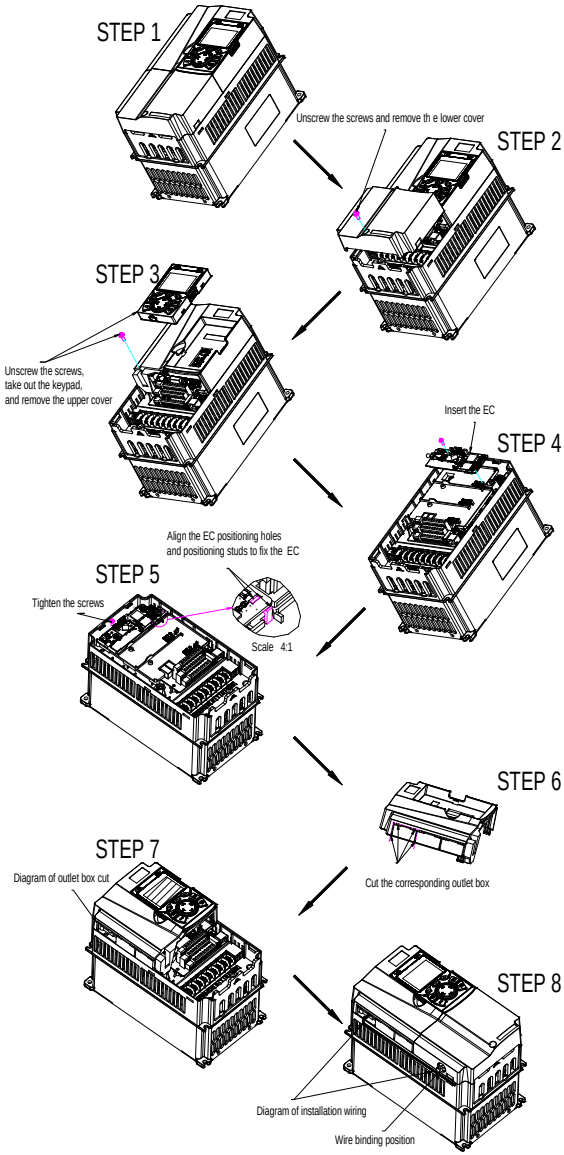

Figure A–3 Expansion card installation process diagram

A.3 Wiring

1. Ground a shielded cable as follows:

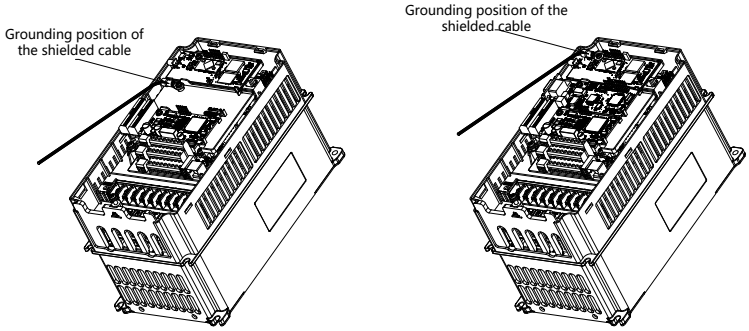

Figure A–4 Expansion card grounding diagram

2. Wire an expansion card as follows:

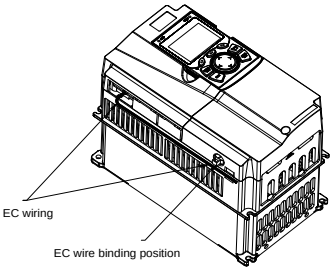

Figure A–5 Expansion card wiring

A.4 IO expansion cards

A.4.1 IO expansion card 1 (EC-IO501-00)

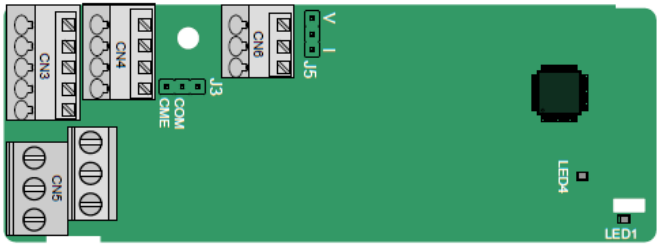

CME and COM are shorted through J3 before delivery, and J5 is the jumper for selecting the output type (voltage or current) of AO2.

The terminals are arranged as follows:

AI3	AO2	GND

COM	CME	Y2	S5	
PW	+24V	S6	S7	S8

RO3A	RO3B	RO3C	
	RO4A		RO4C

Indicator definition

Indicator	Name	Description
LED1	State indicator	On: The expansion card is establishing a connection with the control board. Blinking periodically: The expansion card is properly connected to the control board (the period is 1s, on for 0.5s, and off for the other 0.5s). Off: The expansion card is disconnected from the control board.
LED4	Power indicator	On: The control board feeds power to the expansion card.

The EC-IO501-00 expansion card can be used in scenarios where the I/O interfaces of a Goodrive350-UL VFD cannot meet the application requirements. It can provide 4 digital inputs, 1 digital output, 1 analog input, 1 analog output, and two relay outputs. It is user-friendly, providing relay outputs through European-style screw terminals and other inputs and outputs through spring terminals.

EC-IO501-00 terminal function description

Category	Symbol	Name	Description
Power	PW	External power supply	The working power of digital input is provided by an external power supply. Voltage range: 12–30 V The terminals PW and +24V are shorted before delivery.
Analog input/output	AI3—GND	Analog input 1	1. Input range: 0–10 V, 0–20 mA 2. Input impedance: 20 kΩ for voltage input; 250 Ω for current input 3. Set it to be voltage or current input through the corresponding function code. 4. Resolution: When 10 V corresponds to 50 Hz, the minimum resolution is 5 mV.

Category	Symbol	Name	Description
			5. Deviation: ±0.5%; input of 5 V or 10 mA or higher at the temperature of 25°C
	AO2—GND	Analog output 1	1. Output range: 0–10 V, 0–20 mA 2. Whether it is voltage or current output is determined by J5. 3. Deviation ±0.5%; output of 5 V or 10 mA or higher at the temperature of 25°C
Digital input/output	S5—COM	Digital input 1	1. Internal impedance: 3.3 kΩ 2. Power input range: 12–30 V 3. Bidirectional input terminal 4. Max. input frequency: 1 kHz
	S6—COM	Digital input 2	
	S7—COM	Digital input 3	
	S8—COM	Digital input 4	
	Y2—CME	Digital output	1. Switch capacity: 50 mA/30 V 2. Output frequency range: 0–1 kHz 3. The terminals CME and COM are shorted through J3 before delivery.
Relay output	RO3A	NO contact of relay 3	1. Contact capacity: 3A/AC 250 V, 1A/DC 30 V 2. Do not use them as high-frequency digital outputs.
	RO3B	NC contact of relay 3	
	RO3C	Common contact of relay 3	
	RO4A	NO contact of relay 4	
	RO4C	Common contact of relay 4	

A.4.2 IO expansion card 2 (EC-IO502-00)

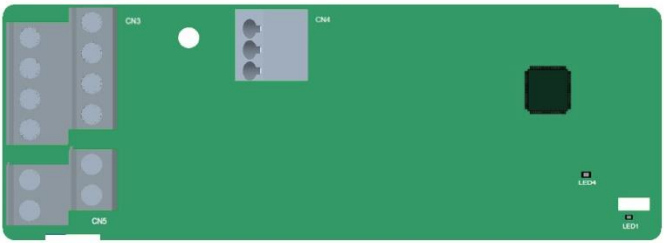

The terminals are arranged as follows.

PT1+	PT-	PT2+

S5	S6	S7	S8
+24V	PW	COM	COM

RO4A	RO4C
RO3A	RO3C

Indicator definition

Indicator	Definition	Function
LED1	State indicator	This indicator is on when the expansion card is establishing a connection with the control board; it blinks periodically after the expansion card is properly connected to the control board (the period is 1s, on for 0.5s, and off for the other 0.5s); and it is off when the expansion card is disconnected from the control board.
LED4	Power indicator	This indicator is on after the IO expansion card is powered on by the control board.

The EC-IO502-00 expansion card can be used in scenarios where the IO interfaces of the VFD cannot meet the application requirements. It can provide four digital inputs, one PT100 temperature measurement input (PT1+), one PT1000 temperature measurement input (PT2+), and two relay outputs. It is user-friendly, providing relay outputs and digital inputs through European-style screw terminals and temperature measurement inputs through spring terminals.

EC-IO502-00 terminal function description

Category	Symbol	Name	Function
Power	PW	External power supply	The working power of digital input is provided by an external power supply. Voltage range: 24(-20%)–48VDC(+10%), 24(-10%)–48VAC(+10%)
	+24V	Internal power	User power provided by the VFD. Max. output current: 200mA
	COM	Power reference	Common terminal of +24V
Digital input	S5—COM	Digital input 5	Internal impedance: 6.6kΩ Supported external power: 24(-20%)–48VDC(+10%), 24(-10%)–48VAC(+10%) Supporting internal power 24V Bi-directional input terminals, supporting
	S6—COM	Digital input 6	
	S7—COM	Digital input 7	
	S8—COM	Digital input 8	

Category	Symbol	Name	Function
			NPN/PNP modes Max. input frequency: 1kHz All are programmable digital input terminals. You can set the terminal function via function codes.
Temperature detection input	PT1+	PT100 input	Independent PT100 and PT1000 inputs. PT1+ connects to PT100, and PT2+ connects to PT1000. 1. Resolution: 1°C 2. Range: -20°C–150°C 3. Detection accuracy: 3°C 4. Supporting offline protection
	PT2+	PT1000 input	
	PT-	Reference input of PT100/PT1000	Zero potential reference of PT100/PT1000
Relay output	RO3A	Contact A of NO relay 3	RO3 relay output. RO3A: NO; RO3C: common terminal Contact capacity: 3A/AC250V, 1A/DC30V
	RO3C	Contact C of NO relay 3	
	RO4A	Contact A of NO relay 4	RO4 relay output. RO4A: NO; RO4C: common terminal Contact capacity: 3A/AC250V, 1A/DC30V
	RO4C	Contact C of NO relay 4	

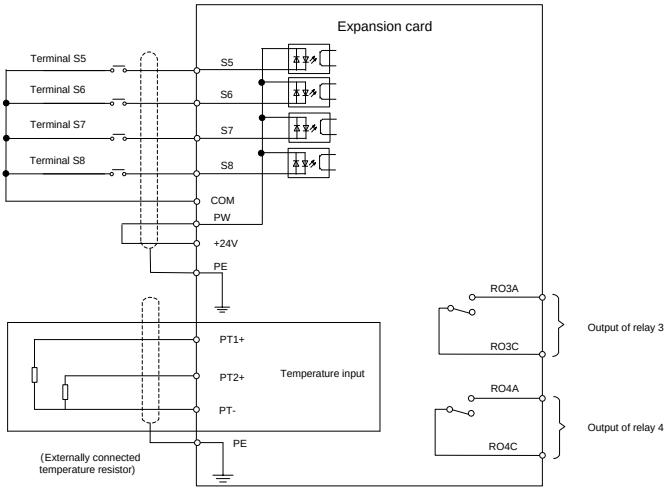

Figure A–6 Control circuit wiring of IO expansion card 2

A.5 Programmable expansion card (EC-PC502-00)

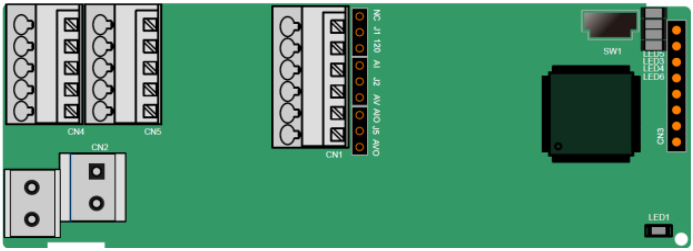

SW1 is the start/stop switch of the programmable expansion card. CN1 contains terminals PE, 485-, 485+, GND, AI1, and AO1, and a selection jumper resides on the next. "AI" and "AV" are the current type input selection and voltage type input selection of AI1, and they can be selected through J2. "AIO" and "AVO" are the current type output selection and voltage type output selection of AO1, and they can be selected through J5. "120" indicates 120Ω terminal resistor, and it can connect to J1. By default, J1 connects to NC, J2 to AV, and J5 to AVO.

The terminals are arranged as follows.

PE	485-	485+	GND	AI1	AO1

COM	COM	PS1	PS2	PS3
PW	24V	PS4	PS5	PS6

PRO1A	PRO1C
PRO2A	PRO2C

Indicator definition

Indicator	Name	Description
LED1	PWR power indicator (green)	The indicator is on when the expansion card is powered on.
LED3	COMM communication indicator (green)	This indicator is on when the expansion card is establishing a connection with the control board; it blinks periodically after the expansion card is properly connected to the control board (the period is 1s, on for 0.5s, and off for the other 0.5s); and it is off when the expansion card is disconnected from the control board.
LED4	ERR fault indicator (red)	Blinks: an error occurs (the period is 1s, on for 0.5s, and off for the other 0.5s), and the error type can be queries through the upper computer Auto Station; Off: no fault.
LED5	PWR power indicator	The indicator is on when the expansion card is

Indicator	Name	Description
	(green)	powered on.
LED6	RUN status indicator (green)	On: PLC program is running Off: PLC program stops

The EC-PC502-00 programmable expansion card can replace some micro PLC applications. It adopts the global mainstream development environment PLC, supporting the instruction language (IL), ladder diagram (LD), and sequential function chart (SFC). It provides a user program storage space of 16K steps and data storage space of 8K words, and supports saving data of 1K words at power failure, which facilitate customers' secondary development and meets the customization requirements.

The EC-PC502-00 programmable expansion card provides six digital inputs, 2 relay outputs, 1 analog input, 1 analog output, 1 RS485 communication channel (supports master/slave switchover). It is user-friendly, providing relay outputs through European-style screw terminals and other inputs and outputs through spring terminals.

EC-PC502-00 terminal function description

Category	Symbol	Name	Function
Power supply	PW	External power supply	To provide input digital working power from external to internal. Voltage range: 12–24V PW and +24V should be short connected.
	24V	Internal power supply	Internal output power supply, 100mA
Common terminal/ground	COM	Common terminal of +24V	Common terminal of +24V. If PS1 is connected, COM indicates PS1 is connected.
	GND	Analog ground	Reference zero potential of +10V
	PE	Protective earthing terminal	Protective earthing terminal
Digital input	PS1—COM	Digital input 1	1. Internal impedance: 4kΩ 2. Accept 12–30V voltage input 3. Bi-directional input terminal 4. Max. input frequency: 1kHz 5. Both source and sink inputs are allowed, but the input types must be the same
	PS2—COM	Digital input 2	
	PS3—COM	Digital input 3	
	PS4—COM	Digital input 4	
	PS5—COM	Digital input 5	
	PS6—COM	Digital input 6	
Analog input and output	AI1	Analog input 1	1. Input range: AI1 voltage and current range: 0–10V, 0–20mA 2. Input impedance: 20kΩ during voltage input; 250Ω during current input

Category	Symbol	Name	Function
			3. Voltage or current input is set through the jumper. 4. Resolution ratio: When 10V corresponds to 50Hz, the min. resolution ratio is 5mV 5. Deviation: ±1% when the input reaches full the measurement range at 25°C
	AO1	Analog output 1	1. Output range: 0–10V voltage or 0–20mA current 2. Voltage or current output is set through the jumper. 3. Deviation: ±1% when the input reaches full the measurement range at 25°C.
Relay output	PRO1A	NO contact of relay 1	1. Contact capacity: 2A/AC250V, 1A/DC30V 2. Unable to function as high frequency switch output
	PRO1C	Common contact of relay 1	
	PRO2A	NO contact of relay 2	
	PRO2C	Common contact of relay 2	
Communication	485+	RS485 communication terminal	RS485 communication port, which can be set as the master or slave through the Auto Station. It is differential signal output. Whether to connect the 120Ω resistor of RS485 is set through the jumper.
	485-		

For details about how to use the programmable card, see the Goodrive350 series AutoStation programmable card manual.

A.6 Communication cards

A.6.1 Bluetooth communication card (EC-TX501) and WIFI communication card (EC-TX502)

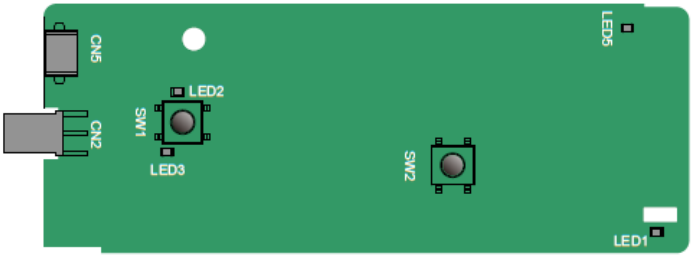

Definitions of indicators and function buttons

Indicator	Name	Description
LED1/LED3	Bluetooth/WIFI state indicator	On: The expansion card is establishing a connection with the control board. Blinking periodically: The expansion card is properly connected to the control board (the period is 1s, on for 0.5s, and off for the other 0.5s). Off: The expansion card is disconnected from the control board.
LED2	Bluetooth communication state indicator	On: Bluetooth communication is online and data exchange can be performed. Off: Bluetooth communication is not in the online state.
LED5	Power indicator	On: The control board feeds power to the Bluetooth card.
SW1	WIFI factory reset button	It is used to restore the expansion card to default values and return to the local monitoring mode.
SW2	WIFI hardware reset button	It is used to restart the expansion card.

The wireless communication card is especially useful for scenarios where you cannot directly use the keypad to operate the VFD due to the restriction of the installation space. With a mobile phone APP, you can operate the VFD in a maximum distance of 30 m. You can choose a PCB antenna or an external sucker antenna. If the VFD is located in an open space and is a molded case machine, you can use a built-in PCB antenna; and if it is a sheetmetal machine and located in a metal cabinet, you need to use an external sucker antenna.

When installing a sucker antenna, install a wireless communication card on the VFD first, and then lead the SMA connector of the sucker antenna into the VFD and screw it to CN2, as shown in the following figure. Place the antenna base on the chassis and expose the upper part. Try to keep it unblocked.

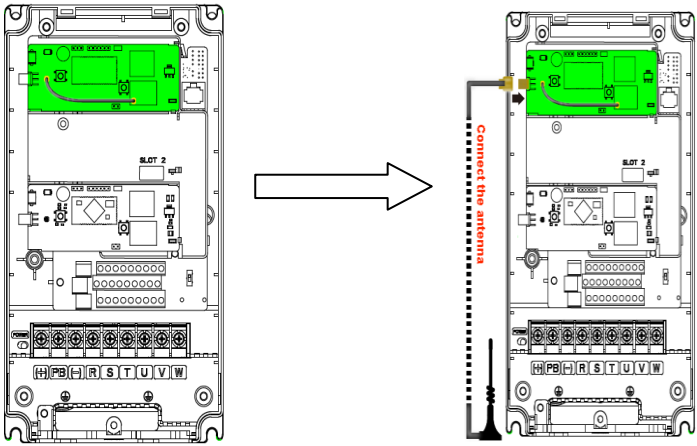

The wireless communication card must be used with the INVT VFD APP. Scan the QR code of the VFD nameplate to download it. For details, refer to the wireless communication card manual provided with the expansion card. The main interface is shown as follows.

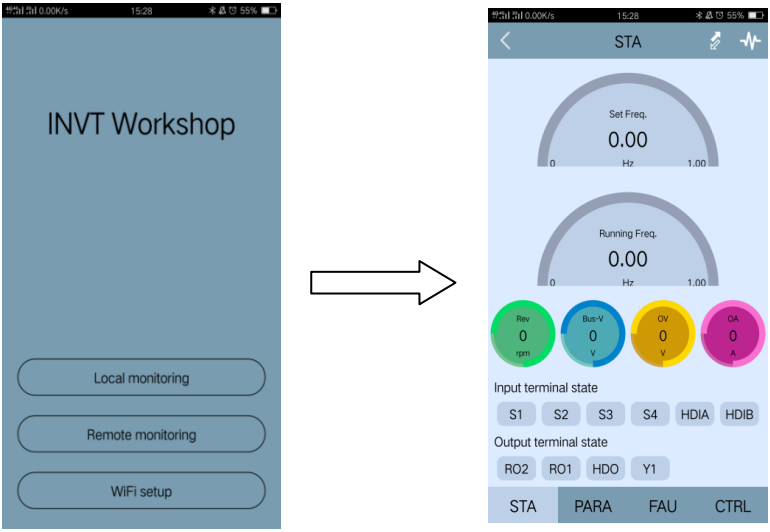

A.6.2 PROFIBUS-DP communication card (EC-TX503)

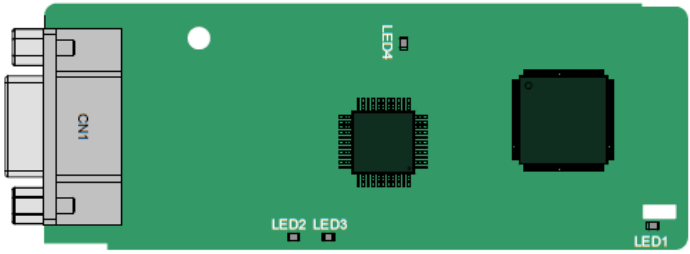

CN1 is a 9-pin D-type connector, as shown in the following figure.

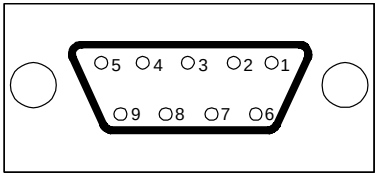

Connector pin		Description
1	-	Unused
2	-	Unused
3	B-Line	Data+ (twisted pair 1)
4	RTS	Request transmission
5	GND_BUS	Isolation ground
6	+5V BUS	Isolated power supply of 5 V DC
7	-	Unused
8	A-Line	Data- (twisted pair 2)
9	-	Unused
Housing	SHLD	PROFIBUS cable shielding line

+5V and GND_BUS are bus terminators. Some devices, such as the optical transceiver (RS485), may need to obtain power through these pins.

On some devices, the transmission and receiving directions are determined by RTS. In normal applications, only A-Line, B-Line, and the shield layer need to be used.

Indicator definition

Indicator	Name	Description
LED1	State indicator	On: The expansion card is establishing a connection with the control board. Blinking periodically: The expansion card is properly connected to the control board (the period is 1s, on for 0.5s, and off for the

Indicator	Name	Description
		other 0.5s). Off: The expansion card is disconnected from the control board.
LED2	Online indicator	On: The communication card is online and data exchange can be performed. Off: The communication card is not in the online state.
LED3	Offline/Fault indicator	On: The communication card is offline and data exchange cannot be performed. Blinks: The communication card is not in the offline state. Blinks at the frequency of 1 Hz: A configuration error occurs: The length of the user parameter data set during the initialization of the communication card is different from that during the network configuration. Blinks at the frequency of 2 Hz: User parameter data is incorrect. The length or content of the user parameter data set during the initialization of the communication card is different from that during the network configuration. Blinks at the frequency of 4 Hz: An error occurs in the ASIC initialization of PROFIBUS communication. Off: The diagnosis function is disabled.
LED4	Power indicator	On: The control board feeds power to the communication card.

For details about the operation, see the *Communication Card Operation Manual*.

A.6.3 Ethernet communication card (EC-TX504)

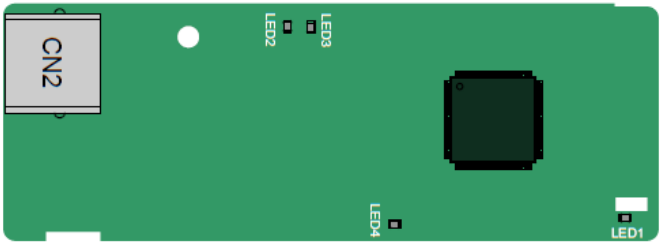

The EC-TX504 communication card adopts standard RJ45 terminals. It is used only on the upper computer that supports INVT Workshop. If you want to support the standard EtherNet/IP protocol, select the card EC-TX510.

Indicator definition

Indicator	Definition	Function
LED1	State indicator	On: The expansion card is establishing a connection with the control board. Blinking periodically: The expansion card is properly connected to the control board (the period is 1s, on for 0.5s, and off for the other 0.5s). Off: The expansion card is disconnected from the control board.
LED2	Network connection status indicator	On: The physical connection to the upper computer is normal. Off: The upper computer is disconnected.
LED3	Network communication status indicator	On: There is data exchange with the upper computer. Off: There is no data exchange with the upper computer.
LED4	Power indicator	On: The control board feeds power to the communication card.

A.6.4 CAN multi-protocol communication card (EC-TX505C)

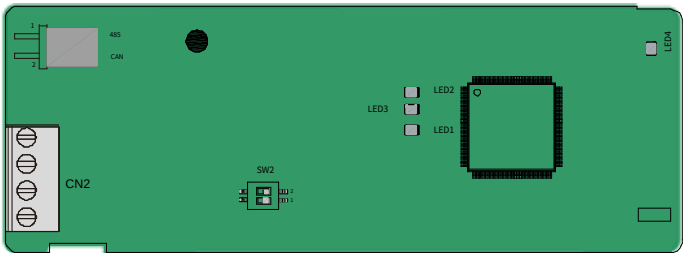

The EC-TX505C communication card is user-friendly, adopting European-type screw terminals.

Label	Description	
PGND	Isolation ground	Isolation ground
PE	Shielded	CAN bus shielding
CANH	CANopen bus high level signal	CAN bus high level signal
CANL	CANopen bus low level signal	CAN bus low level signal
CAN	CAN terminal resistor switch	ON: CAN_H and CAN_L are connected to a terminal resistor.
		OFF: CAN_H and CAN_L are not connected to a terminal resistor.

Note: Before power on, please select the protocol type by setting the switch SW2 as follows:

Switch SW2		
1	2	**Protocol type**
OFF	OFF	CANopen
ON	OFF	CAN master/slave

Indicator definition

Indicator	Definition	Function
LED1	State indicator	On: The communication card is establishing a connection with the control board. Blinking periodically: The communication card is properly connected to the control board (the period is 1s, on for 0.5s, and off for the other 0.5s). Off: The communication card is disconnected from the control board.
LED2	Running indicator	On: The communication card is running. Blinks: The communication card is in the pre-operation state. Off: A fault occurs. Check whether the reset pin of the communication card and the power supply are properly connected. The communication card is in the stopped state.
LED3	Error indicator	On: The CAN controller bus is off, a fault occurs on the inverter, or a received frame is missed or an error occurs during frame receiving. Off: The communication card is in the working state.
LED4	Power indicator	On: The control board feeds power to the communication card.

For details about the operation, see the *Communication Card Operation Manual*.

A.6.5 PROFINET communication card (EC-TX509)

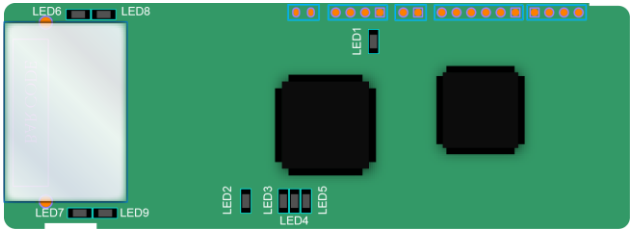

The terminal CN2 adopts a standard RJ45 interface, where CN2 is the dual RJ45 interface, and these two RJ45 interfaces are not distinguished from each other and can be interchangeably inserted. They are arranged as follows:

Pin	Name	Description
1	TX+	Transmit Data+
2	TX-	Transmit Data-
3	RX+	Receive Data+
4	n/c	Not connected
5	n/c	Not connected
6	RX-	Receive Data-
7	n/c	Not connected
8	n/c	Not connected

Definition of the state indicator

The PROFINET communication card has 9 indicators, of which LED1 is the power indicator, LEDs 2–5 are the communication state indicators of the communication card, and LEDs 6–9 are the state indicators of the network port.

Indicator	Color	State	Description
LED1	Green		3.3V power indicator
LED2 (Bus state indicator)	Red	On	No network connection
		Blinking	The connection to the PROFINET controller through a network cable is OK, but the communication is not established.
		Off	Communication with the PROFINET controller has been established
LED3 (System fault indicator)	Green	On	PROFINET diagnosis is enabled
		Off	PROFINET diagnosis is not enabled
LED4 (Slave ready indicator)	Green	On	TPS-1 protocol stack has started
		Blinking	TPS-1 waits for MCU initialization
		Off	TPS-1 protocol stack does not start
LED5 (Maintenance state indicator)	Green		Manufacturer-specific—depending on the characteristics of the device
LED6/7 (Network port state indicator)	Green	On	PROFINET communication card and PC/PLC have been connected through a network cable.
		Off	PROFINET communication card and PC/PLC have not been connected.
LED8/9 (Network port communication indicator)	Green	On	PROFINET communication card and PC/PLC are communicating.
		Off	PROFINET communication card and PC/PLC are not communicating.

Electrical connection

The PROFINET communication card adopts a standard RJ45 interface and can adopt the linear network topology or star network topology. The electrical connection in linear network topology mode is shown in the following.

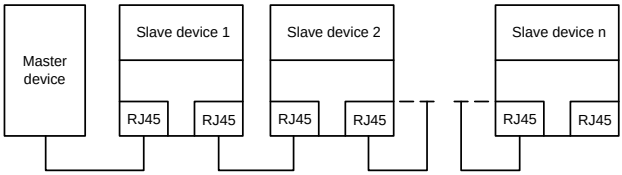

Note: For the star network topology, you need to prepare PROFINET switches.

The electrical connection in start network topology mode is shown in the following.

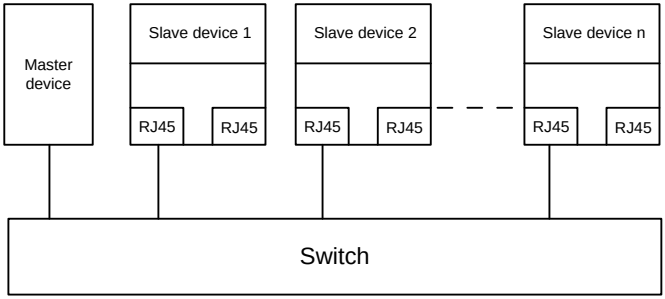

A.6.6 EtherNet/IP communication card (EC-TX510) and Modbus TCP communication card (EC-TX515)

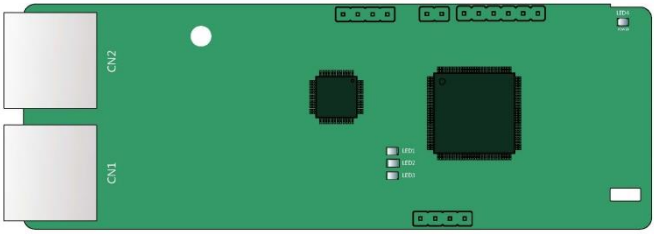

The communication port adopts standard dual RJ45 interfaces, and the two RJ45 interfaces are not distinguished from each other and can be interchangeably inserted.



Figure A–7 Standard RJ45 interface

Standard RJ45 interface functions

Pin	Name	Description
1	TX+	Transmit Data+
2	TX-	Transmit Data-
3	RX+	Receive Data+
4	n/c	Not connected
5	n/c	Not connected
6	RX-	Receive Data-
7	n/c	Not connected
8	n/c	Not connected

Indicator definition

The EtherNet/IP communication card provides four LED indicators and four net port indicators to indicate its states.

Indicator	Color	State	Description
LED1	Green	On	The card is shaking hands with the VFD.
		Blinking (1Hz)	The card and VFD communicate normally.
		Off	The card and VFD communicate improperly.
LED2	Green	On	The communication between the card and PLC is online and data interchange is allowed.
		Blinking (1Hz)	IP address conflict between the card and PLC.
		Off	The communication between the card and PLC is offline.
LED3	Red	On	Failed to set up I/O between the card and PLC.
		Blinking (1Hz)	Incorrect PLC configuration.
		Blinking (2Hz)	The card failed to send data to the PLC.
		Blinking (4Hz)	The connection between the card and PLC timed out.
		Off	No fault.
LED4	Red	On	3.3V power indicator.
Net port indicator	Yellow	On	Link indicator, indicating successful Ethernet connection.
		Off	Link indicator, indicating Ethernet connection not established.
Net port indicator	Green	On	ACK indicator, indicating data interchange being performed.
		Off	ACK indicator, indicating data interchange not be performed.

Electrical wiring

The EtherNet/IP communication card provides standard RJ45 ports and supports the linear, star, and ring topologies. The following three figures show the electrical wiring diagrams.

Use CAT5, CAT5e, and CAT6 network cables for electrical wiring. When the communication distance is greater than 50 meters, use high-quality network cables that meet the high-quality standards.

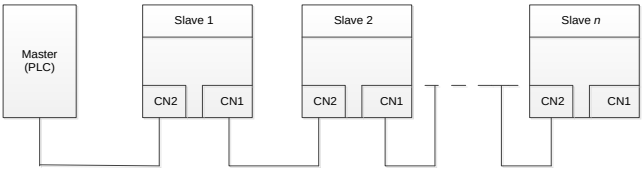

Figure A–8 Electrical wiring diagram for a linear topology

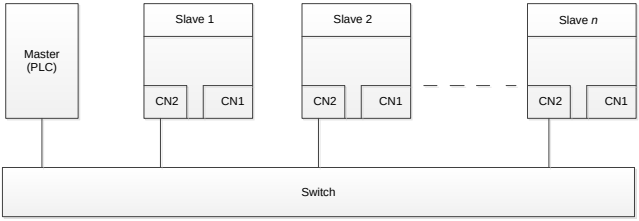

Figure A–9 Electrical wiring diagram for a star topology

Note: Ethernet switches must be available when the star topology is used.

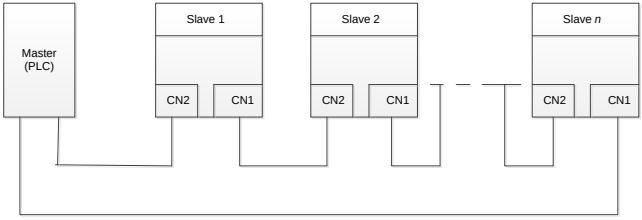

Figure A–10 Electrical wiring diagram for a ring network

A.7 PG cards

A.7.1 Sin/Cos PG card (EC-PG502)

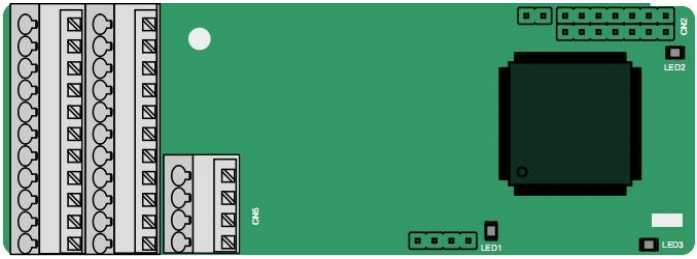

The terminals are arranged as follows:

							C1+	C1-	D1+	D1-
PE	AO+	BO+	ZO+	A1+	B1+	R1+	A2+	B2+	Z2+	PWR
GND	AO-	BO-	ZO-	A1-	B1-	R1-	A2-	B2-	Z2-	GND

Indicator definition

Indicator	Name	Description
LED1	Disconnection indicator	Off: A1 and B1 of the encoder are disconnected. Blinking: C1 and D1 of the encoder are disconnected. On: The encoder signals are normal.
LED2	Power indicator	On: The control board feeds power to the PG card.
LED3	State indicator	On: The expansion card is establishing a connection with the control board. Blinking periodically: The expansion card is properly connected to the control board (the period is 1s, on for 0.5s, and off for the other 0.5s). Off: The expansion card is disconnected from the control board.

EC-PG502 terminal function description

Signal	Port	Function
PWR	Encoder power	Voltage: 5 V ± 5% Max. output current: 150 mA
GND		
A1+	Encoder interface	1. Supporting Sin/Cos encoders 2. SINA/SINB/SINC/SIND 0.6–1.2Vpp; SINR 0.2–0.85Vpp
A1-		
B1+		

Signal	Port	Function
B1-		3. Max. frequency response of A/B signals: 200 kHz Max. frequency response of C/D signals: 1 kHz
R1+		
R1-		
C1+		
C1-		
D1+		
D1-		
A2+	Pulse reference	1. Supporting 5V differential signal 2. Frequency response: 200 kHz
A2-		
B2+		
B2-		
Z2+		
Z2-		
AO+	Frequency-divided output	1. Differential output of 5 V 2. Supporting frequency division of 2^N, which can be set through P20.16 or P24.16; Max. output frequency: 200 kHz
AO-		
BO+		
BO-		
ZO+		
ZO-		

The following figure shows the external wiring of the PG card when it is used in combination with an encoder without CD signals.

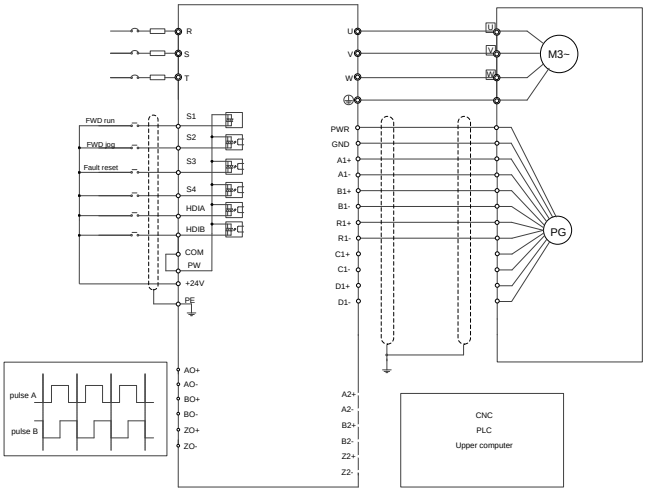

The following figure shows the external wiring of the PG card when it is used in combination with an

encoder with CD signals.

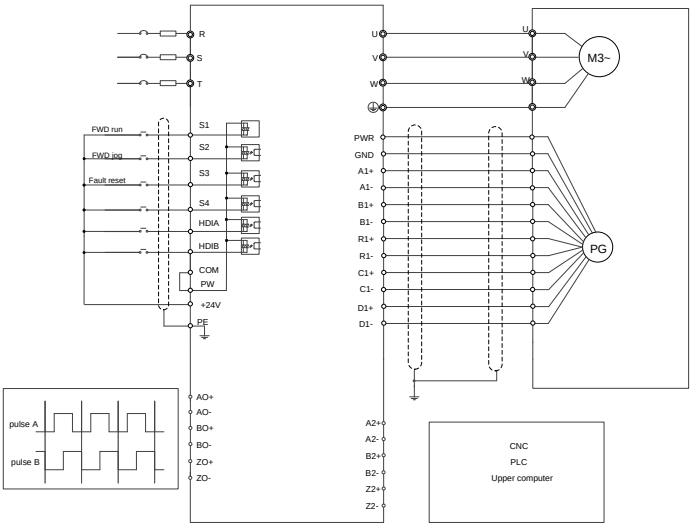

A.7.2 UVW incremental PG card (EC-PG503-05)

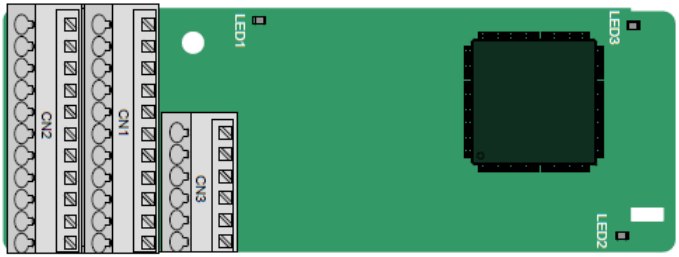

The terminals are arranged as follows:

					A2+	A2-	B2+	B2-	Z2+	Z2-
PE	AO+	BO+	ZO+	A1+	B1+	Z1+	U+	V+	W+	PWR
GND	AO-	BO-	ZO-	A1-	B1-	Z1-	U-	V-	W-	PGND

Indicator definition

Indicator	Name	Description
LED1	Disconnection indicator	This indicator blinks only if A1 or B1 signal is disconnected during encoder rotating; and it is on in other cases.
LED2	State indicator	On: The expansion card is establishing a connection with the control board.

Indicator	Name	Description
		Blinking periodically: The expansion card is properly connected to the control board (the period is 1s, on for 0.5s, and off for the other 0.5s). Off: The expansion card is disconnected from the control board.
LED3	Power indicator	On: The control board feeds power to the PG card.

The EC-PG503-05 expansion card supports the input of absolute position signals and integrates the advantages of absolute and incremental encoders. It is user-friendly, adopting spring terminals.

EC-PG503-05 terminal function description

Signal	Port	Description
PWR	Encoder power	Voltage: 5 V±5% Max. current: 200 mA
PGND		
A1+	Encoder interface	1. Differential incremental PG interface of 5 V 2. Response frequency: 400 kHz
A1-		
B1+		
B1-		
Z1+		
Z1-		
A2+	Pulse setting	1. Differential input of 5 V 2. Response frequency: 200 kHz
A2-		
B2+		
B2-		
Z2+		
Z2-		
AO+	Frequency-divided output	1. Differential output of 5 V 2. Supporting frequency division of 1–255, which can be set through P20.16 or P24.16
AO-		
BO+		
BO-		
ZO+		
ZO-		
U+	UVW encoder interface	1. Absolute position (UVW information) of the hybrid encoder, differential input of 5 V 2. Response frequency: 40 kHz
U-		
V+		
V-		
W+		
W-		

The following figure shows the external wiring of the EC-PG503-05 expansion card.

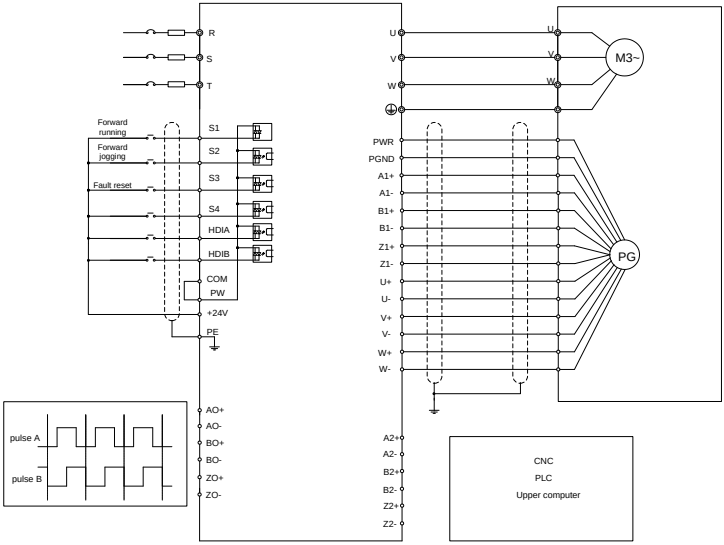

A.7.3 Resolver PG card (EC-PG504-00)



PE	AO+	BO+	ZO+	EX+	SI+	CO+	A2+	B2+	Z2+	PWR
GND	AO-	BO-	ZO-	EX-	SI-	CO-	A2-	B2-	Z2-	GND

Indicator definition

Indicator	Name	Description
LED1	State indicator	On: The expansion card is establishing a connection with the control board. Blinking periodically: The expansion card is properly connected to the control board (the period is 1s, on for 0.5s, and off for the other 0.5s).

Indicator	Name	Description
		Off: The expansion card is disconnected from the control board.
LED2	Disconnection indicator	Off: The encoder is disconnected. On: The encoder signals are normal. Blinks: The encoder signals are not stable.
LED3	Power indicator	On: The control board feeds power to the PG card.

The EC-PG504-00 expansion card can be used in combination with a resolver of excitation voltage 7 Vrms. It is user-friendly, adopting spring terminals.

EC-PG504-00 terminal function description

Signal	Port	Description
SI+	Encoder signal input	Recommended resolver transformation ratio: 0.5
SI-		
CO+		
CO-		
EX+	Encoder excitation signal	1. Factory setting of excitation: 10 kHz 2. Supporting resolvers with an excitation voltage of 7 Vrms
EX-		
A2+	Pulse setting	1. Differential input of 5 V 2. Response frequency: 200 kHz
A2-		
B2+		
B2-		
Z2+		
Z2-		
AO+	Frequency-divided output	1. Differential output of 5 V 2. Frequency-divided output of resolver simulated A1, B1, and Z1, which is equal to an incremental PG card of 1024 pps. 3. Supporting frequency division of 2^N, which can be set through P20.16 or P24.16 4. Max. output frequency: 200 kHz
AO-		
BO+		
BO-		
ZO+		
ZO-		

The following figure shows the external wiring of the EC-PG504-00 expansion card.

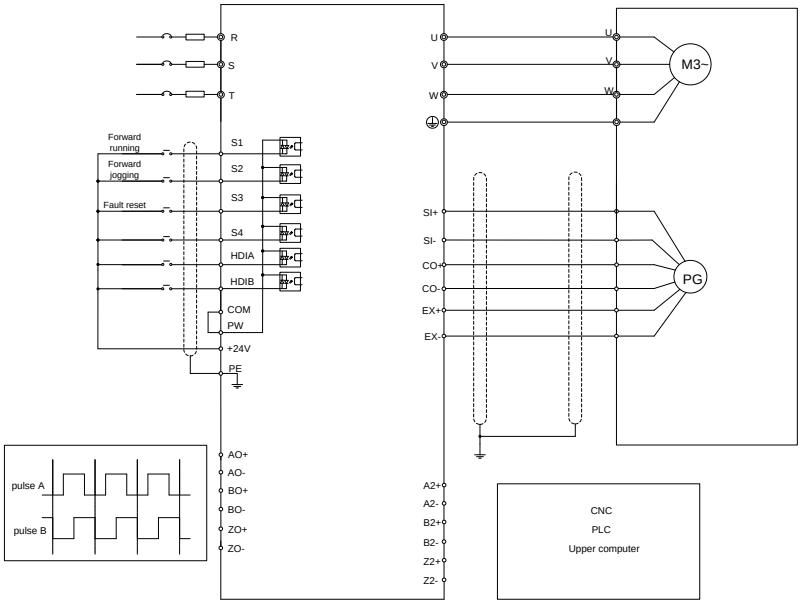

A.7.4 Multifunction incremental PG card (EC-PG505-12)

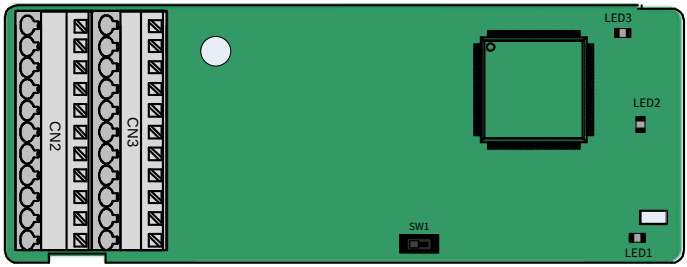

The terminals are arranged as follows:

The switch SW1 is used to set the voltage class (5 V or 12 V) of the power supply of the encoder. The switch can be operated with an auxiliary tool.

PE	AO+	BO+	ZO+	A1+	B1+	Z1+	A2+	B2+	Z2+	PWR
GND	AO-	BO-	ZO-	A1-	B1-	Z1-	A2-	B2-	Z2-	PGND

Indicator definition

Indicator	Name	Description
LED1	State indicator	On: The expansion card is establishing a connection with the

Indicator	Name	Description
		control board. Blinking periodically: The expansion card is properly connected to the control board (the period is 1s, on for 0.5s, and off for the other 0.5s). Off: The expansion card is disconnected from the control board.
LED2	Disconnection indicator	This indicator blinks only if A1 or B1 signal is disconnected during encoder rotating; and it is on in other cases.
LED3	Power indicator	On: The control board feeds power to the PG card.

The EC-PG505-12 expansion card can be used in combination with multiple types of incremental encoders through different modes of wiring. It is user-friendly, adopting spring terminals.

EC-PG505-12 terminal function description

Signal	Port	Description
PWR	Encoder power	Voltage: 5 V/12 V ±5% Max. output: 150 mA Select the voltage class through the switch SW1 based on the voltage class of the used encoder.
PGND		
A1+	Encoder interface	1. Supporting push-pull interfaces of 5 V/12 V 2. Supporting open collector interfaces of 5 V/12 V 3. Supporting differential interfaces of 5 V 4. Response frequency: 400 kHz
A1-		
B1+		
B1-		
Z1+		
Z1-		
A2+	Pulse setting	1. Supporting the same signal types as the encoder signal types 2. Response frequency: 400 kHz
A2-		
B2+		
B2-		
Z2+		
Z2-		
AO+	Frequency-divided output	1. Differential output of 5 V 2. Supporting frequency division of 1–255, which can be set through P20.16 or P24.16
AO-		
BO+		
BO-		
ZO+		
ZO-		

The following figure shows the external wiring of the expansion card used in combination with an open collector encoder. A pull-up resistor is configured inside the PG card.

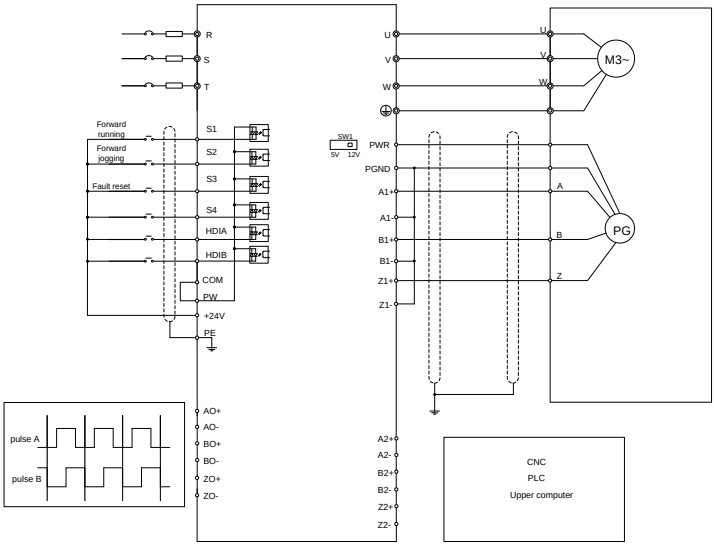

The following figure shows the external wiring of the expansion card used in combination with a push-pull encoder.

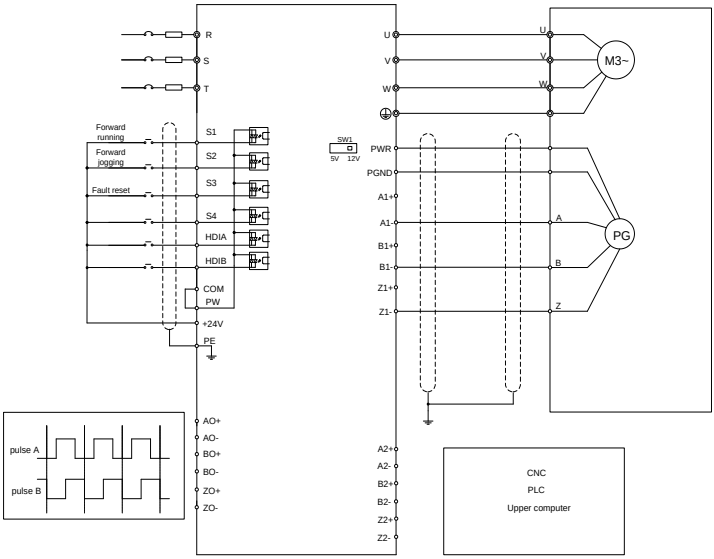

The following figure shows the external wiring of the expansion card used in combination with a differential encoder.

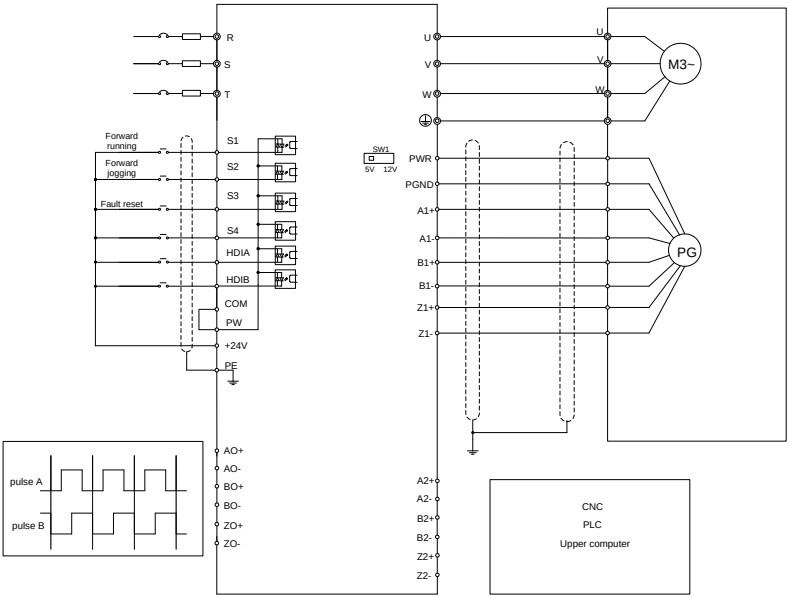

A.7.5 24V incremental PG card (EC-PG505-24B)

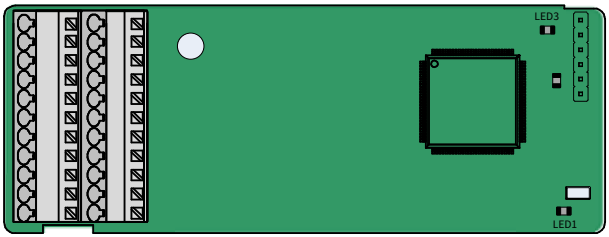

The terminals are arranged as follows:

PE	AO+	BO+	ZO+	A1+	B1+	Z1+	A2+	B2+	Z2+	PWR
GND				A1-	B1-	Z1-	A2-	B2-	Z2-	PGND

Indicator definition

Indicator	Name	Description
LED1	State indicator	On: The expansion card is establishing a connection with the control board. Blinking periodically: The expansion card is properly

Indicator	Name	Description
		connected to the control board (the period is 1s, on for 0.5s, and off for the other 0.5s). Off: The expansion card is disconnected from the control board.
LED2	Disconnection indicator	This indicator blinks only if A1 or B1 signal is disconnected during encoder rotating; and it is on in other cases.
LED3	Power indicator	On: The control board feeds power to the PG card.

EC-PG505-24B can work in combination with multiple types of incremental encoders through various external wiring modes. It is user-friendly, adopting spring terminals. AO-, BO-, AND ZO- are internally short connected to PGND.

EC-PG505-24B terminal function description

Signal	Port	Description
PWR	Encoder power supply	Voltage: 24 V ± 5% Max. output current: 150 mA
PGND		
A1+	Encoder interface	1. Supporting 24 V push-pull interfaces 2. Supporting 24 V open collector interfaces 3. Supporting 24V differencial interfaces 4. Frequency response: 400 kHz
A1-		
B1+		
B1-		
Z1+		
Z1-		
A2+	Pulse reference	1. Supporting 24V push-pull and OC interfaces 2. Supporting 5V differential interface 3. Frequency response: 400 kHz
A2-		
B2+		
B2-		
Z2+		
Z2-		
AO+	Frequency-divided output	1. Supporting open collector output. The input is externally connected with the pull-up resistor. 2. Supporting frequency division of 1–255, which can be set through P20.16 or P24.16 3. Supporting frequency division output source, which can be set through P20.17 or P24.17.
BO+		
ZO+		

The following figure shows the external wiring of the PG card when it is used in combination with an open collector encoder. A pull-up resistor is configured in the PG card.

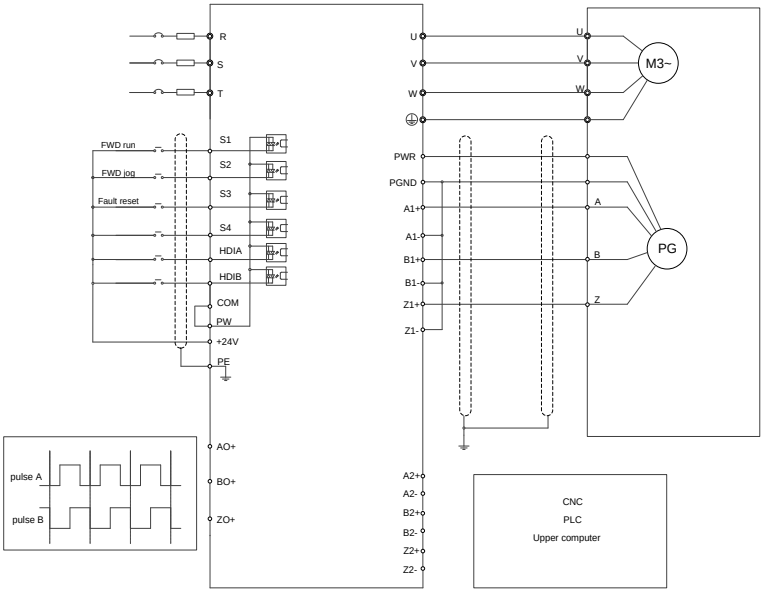

The following figure shows the external wiring of the PG card when it is used in combination with a push-pull encoder.

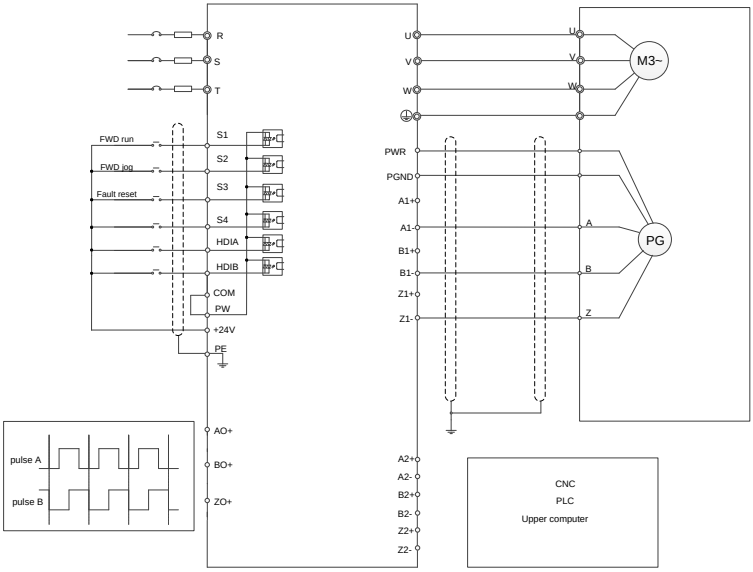

A.7.6 Simplified incremental PG card (EC-PG507-12)

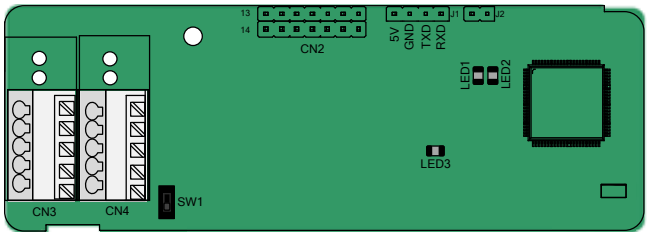

The switch SW1 is used to set the voltage class (5 V or 12 V) of the power supply of the encoder. The switch can be operated with an auxiliary tool.

The terminals are arranged as follows:

PE	A1+	B1+	Z1+	PWR
PGND	A1-	B1-	Z1-	PGND

Indicator definition

Indicator	Name	Description
LED1	State indicator	On: The expansion card is establishing a connection with the control board. Blinking periodically: The expansion card is properly connected to the control board (1s duration, on for 0.5s, and off for the other 0.5s). Off: The expansion card is disconnected from the control board.
LED2	Disconnection indicator	Off: A1 or B1 of the encoder is disconnected. On: The encoder pulses are normal.
LED3	Power indicator	On: The control board feeds power to the PG card.

The EC-PG507-12 expansion card can be used in combination with multiple types of incremental encoders through different modes of wiring. The wiring modes are similar with EC-PG505-12.

EC-PG507-12 terminal function description

Signal	Port	Description
PWR	Encoder power	Voltage: 5V/12V ± 5%; Max. current: 150 mA The voltage class can be selected through SW1, depending on the encoder voltage class.
PGND		
A1+	Encoder interface	1. Supporting push-pull interfaces of 5 V/12 V 2. Supporting open collector interfaces of 5 V/12 V 3. Supporting differential interfaces of 5 V 4. Response frequency: 400 kHz 5. Supporting the encoder cable length of up to 50 m
A1-		
B1+		
B1-		
Z1+		
Z1-		

A.7.7 24V simplified incremental PG card (EC-PG507-24)

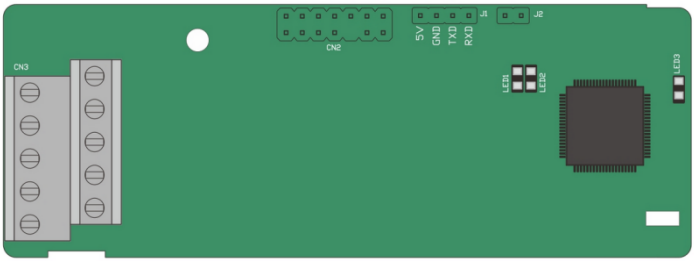

The terminals are arranged as follows:

PE	A1+	B1+	Z1+	PWR
PGND	A1-	B1-	Z1-	PGND

Indicator definition

Indicator	Name	Description
LED1	State indicator	This indicator is on when the expansion card is establishing a connection with the control board; it blinks periodically after the expansion card is properly connected to the control board (the period is 1s, on for 0.5s, and off for the other 0.5s); and it is off when the expansion card is disconnected from the control board.
LED2	Disconnection indicator	Off: A1 or B1 of the encoder is disconnected. On: The encoder pulses are normal.
LED3	Power indicator	This indicator is on after the control board feeds power to the PG card.

EC-PG507-24 can work in combination with multiple types of incremental encoders through various external wiring modes. It is easy to use for the use of 5.08mm pitch terminal.

EC-PG507-24 terminal function description

Signal	Port	Description
PE	Grounding terminal	Connected to the ground to enhance anti-interference performance.
PWR	Encoder power	Voltage: 24V±5%; Max. output current: 150mA (PGND is the ground for power isolation)
PGND		
A1+	Encoder interface	1. Supporting push-pull interfaces of 24 V 2. Supporting open collector interfaces of 24 V 3. Supporting differential interfaces of 24 V 4. Frequency response: 200 kHz
A1-		
B1+		
B1-		

Signal	Port	Description
Z1+		5. Supporting upporting the encoder cable length of up to 100 m
Z1-		

The following figure shows the external wiring of the PG card when it is used in combination with an open collector encoder. A pull-up resistor is configured in the PG card.

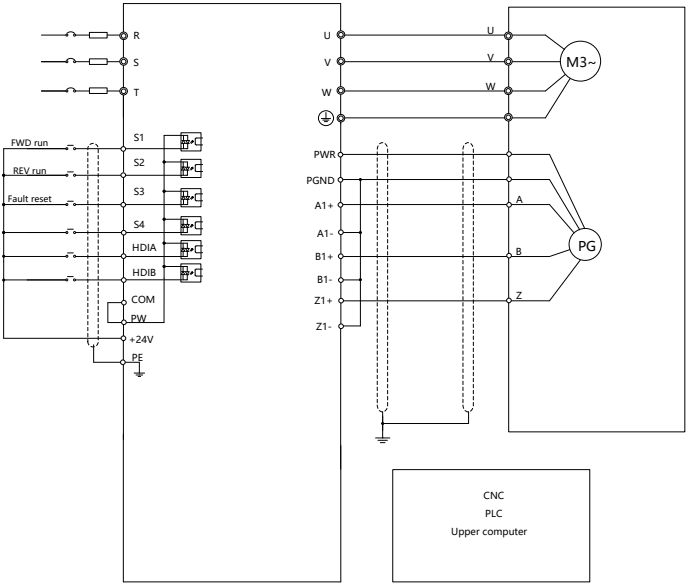

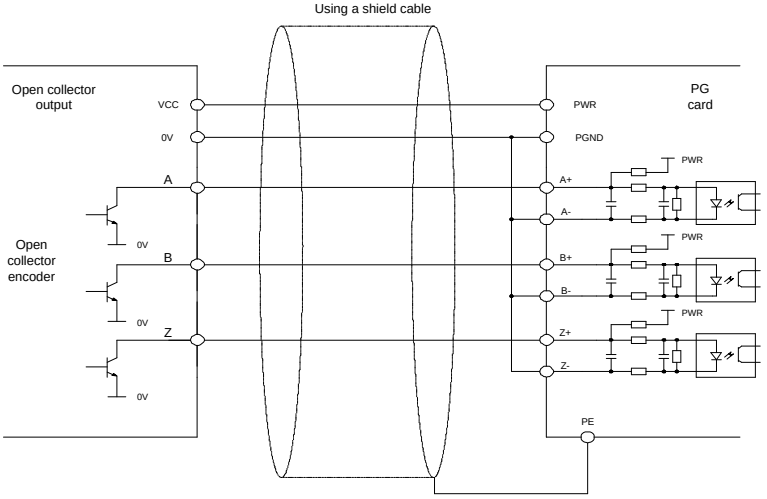

The following figure shows the external wiring of the PG card when it is used in combination with a push-pull encoder.

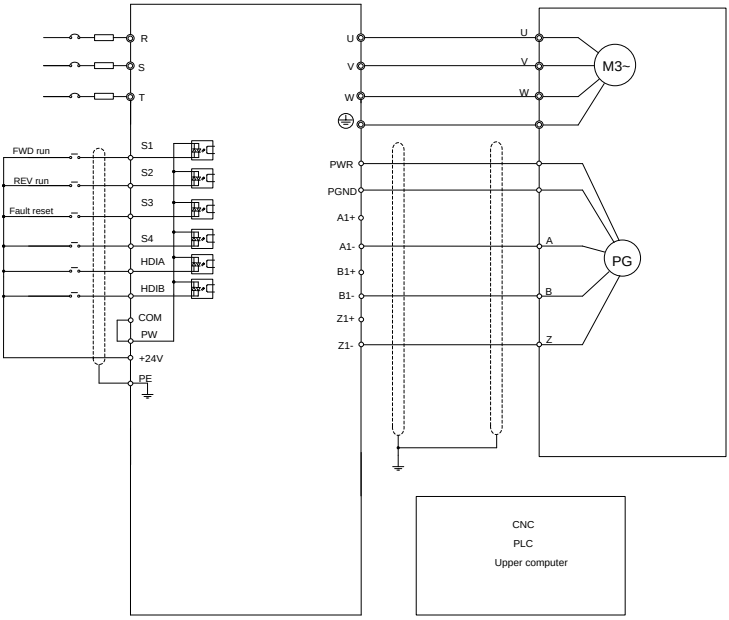

Using a shield cable

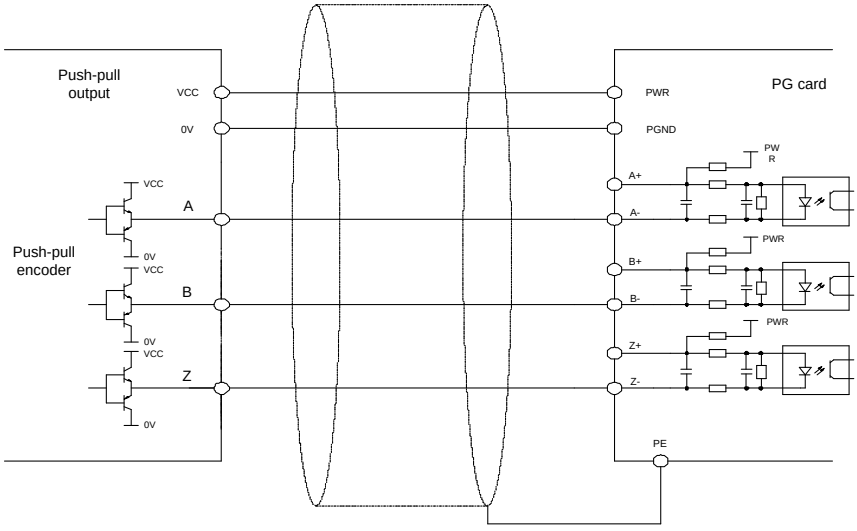

The following figure shows the external wiring of the PG card when it is used in combination with a differential encoder.

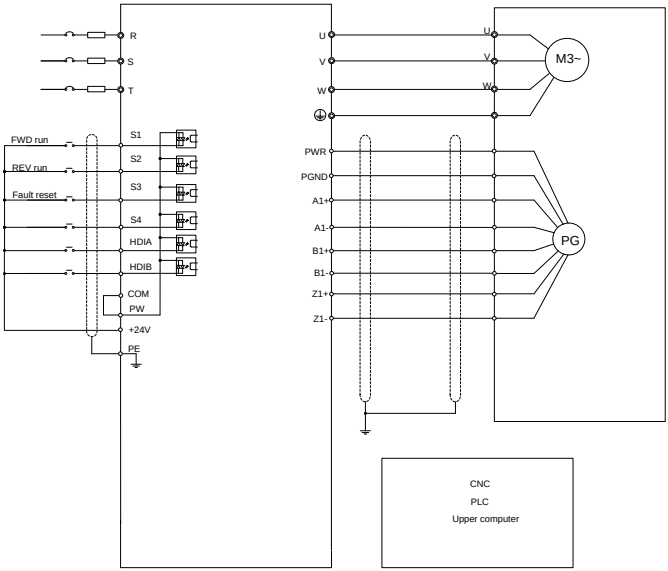

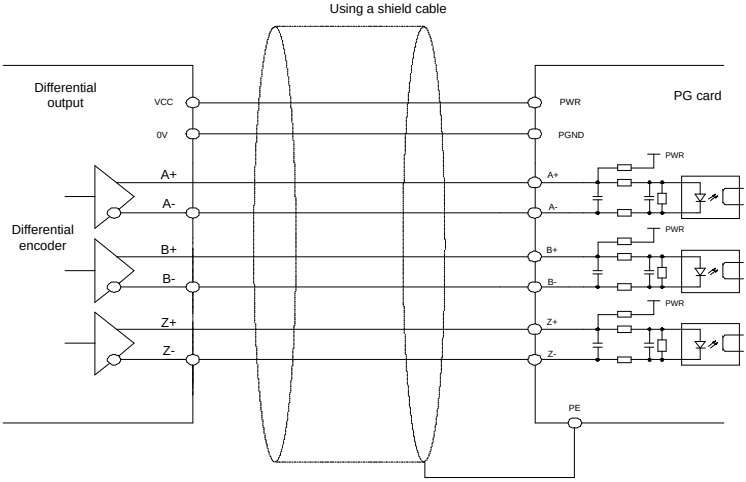

A.8 IoT cards

A.8.1 GPRS card (EC-IC501-2)

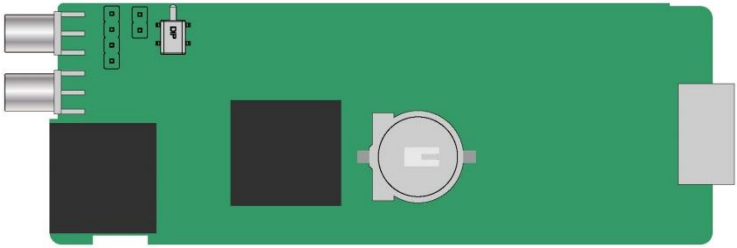

CN6 pin definition

Pin	Name	Description
1	485-	485B
2	485+	485A
3	GND	Power ground
4	24V	24V power

State indicator definition

The GPRS IoT card has five state indicators.

Indicator	Name	Function
LED1	Handshaking indicator	It blinks at a frequency of 1s when the card normally connects to the control board.
LED2	Power indicator	It is on upon power on.
LED3	Run indicator	The card communicates normally.
LED4	GPRS state indicator	When GPRS connects to the network, it blinks fast at a specific interval (with 64ms on and 300ms off); when GPRS does not connect to the network, it blinks slowly at a specific interval (with 64ms on and 800ms off).
LED5	State indicator	It is always on when the GPRS module is powered on.

For details, see the EC series GPRS expansion card manual.

A.8.2 4G card (EC-IC502-2-CN, EC-IC502-2-EU, EC-IC502-2-LA)

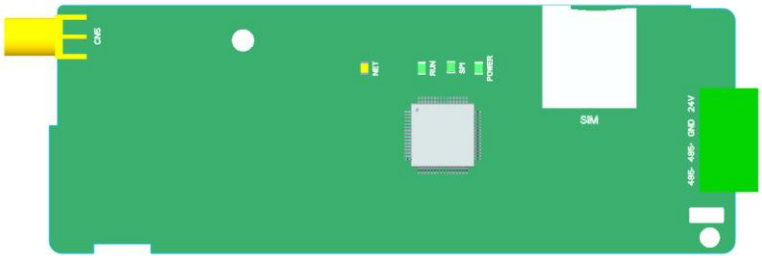

Terminal definition

Terminal	Description
24V	Power supply +
GND	Power supply -
485+	485A
485-	485B
4G	4G antenna
CN3	SIM card tray

Indicator definition

Indicator	Description
NET	Network indicator Blinking slowly (On: 600ms; Off: 600ms): No SIM card/Network registration in progress/Registration failed. Blinking fast (On: 75ms; Off: 75ms): Data link established.
RUN	Running indicator Blinking (On: 1s; Off: 1s): The system runs properly. On or Off: System exceptions happened.
SPI	Handshaking indicator Blinking (On: 1s; Off: 1s): Handshaking between the expansion card and VFD control board is successful. On: Handshaking failed or no handshaking.
POWER	Power supply indicator

Note: For details about the operation, see the EC Series 4G Expansion Card Operation Manual.

Appendix B Technical data

B.1 What this chapter contains

This chapter describes the technical data of the VFD and its compliance to CE and other quality certification systems.

B.2 Derated application

B.2.1 Capacity

Choose a VFD model based on the rated current and power of the motor. To ensure the rated power of the motor, the rated output current of the VFD must be greater or equal to the rated current of the motor. The rated power of the VFD must be higher or equal to that of the motor.

Note:

- The maximum allowable shaft power of the motor is limited to 1.5 times the rated power of the motor. If the limit is exceeded, the VFD automatically restricts the torque and current of the motor. This function effectively protect the input shaft against overload.
- The rated capacity is the capacity at the ambient temperature of 40°C.
- You need to check and ensure that the power flowing through the common DC connection in the common DC system does not exceed the rated power of the motor.

B.2.2 Derating

If the ambient temperature on the site where the VFD is installed exceeds 40°C, the altitude exceeds 1000 m, a cover with heat dissipation vents is used, or the carrier frequency is higher than the recommended, the VFD needs to be derated.

B.2.2.1. Derating due to temperature

When the temperature ranges from +40°C to +50°C, the rated output current is derated by 1% for each increased 1°C. For the actual derating, see the following figure.

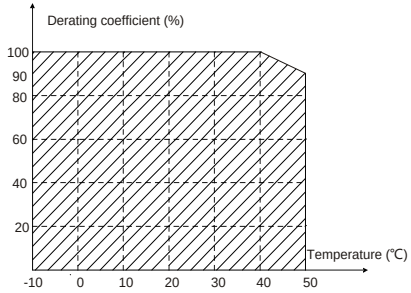

Note: It is not recommended to use the VFD at a temperature higher than 50°C. In case of violation, we shall bear no liability for the consequences caused.

B.2.2.2. Derating due to altitude

When the altitude of the site where the VFD is installed is lower than 1000 m, the VFD can run at the

rated power. When the altitude exceeds 1000m, derate by 1% for every increase of 100m. When the altitude exceeds 3000m, consult the local INVT dealer or local INVT office for details.

B.2.2.3. Derating due to carrier frequency

The power of the VFD varies according to carrier frequencies. The VFD rated power is defined based on the carrier frequency set in factory. If the carrier frequency exceeds the factory setting, the power of the VFD is derated by 10% for each increased 1 kHz.

B.3 Grid specifications

Grid voltage	AC 3PH 380V(-15%)–440V(+10%)
Short-circuit capacity	According to the definition of IEC 61439-1, the 1R5G/2R2P–015G/018P VFD models are suitable for the use on the grid with the maximum expected short-circuit current no more than 5kA at the maximum rated voltage; the 018G/022P–090G/110P VFD models are suitable for the use on the grid with the maximum expected short-circuit current no more than 22kA at the maximum rated voltage; the 110G/132P–500G VFD models are suitable for the use on the grid with maximum expected short-circuit current no more than 100kA at the maximum rated voltage.
Frequency	50/60 Hz±5%, with a maximum change rate of 20%/s

B.4 Motor connection data

Motor type	Asynchronous induction motor or permanent magnetic synchronous motor
Voltage	0–U1 (rated voltage of the motor), 3PH symmetrical, Umax (rated voltage of the VFD) at the field-weakening point
Short-circuit protection	The short-circuit protection for the motor output meets the requirements of IEC 61800-5-1.
Frequency	0–400 Hz
Frequency resolution	0.01 Hz
Current	See 3.6 Product ratings.
Power limit	1.5 times of the rated power of the motor
Field-weakening point	10–400 Hz
Carrier frequency	4, 8, 12, or 15 kHz

B.5 Application standards

The following table describes the standards that the VFD complies with.

EN/ISO 13849-1	Safety of machinery—Safety-related parts of control systems—Part 1: General principles for design
IEC/EN 60204-1	Safety of machinery—Electrical equipment of machines. Part 1:

	General requirements
IEC/EN 62061	Safety of machinery—Safety-related functional safety of electrical, electronic, and programmable electronic control systems
IEC/EN 61800-3	Adjustable speed electrical power drive systems—Part 3:EMC requirements and specific test methods
IEC/EN 61800-5-1	Adjustable speed electrical power drive systems—Part 5-1: Safety requirements—Electrical, thermal and energy
IEC/EN 61800-5-2	Adjustable speed electrical power drive systems—Part 5-2: Safety requirements—Function
GB/T 30844.1	General-purpose variable-frequency adjustable-speed equipment of 1 kV and lower—Part 1: Technical conditions
GB/T 30844.2	General-purpose variable-frequency adjustable-speed equipment of 1 kV and lower—Part 2: Test methods
GB/T 30844.3	General-purpose variable-frequency adjustable-speed equipment of 1 kV and lower—Part 3: Safety regulations

B.5.1 CE marking

The CE marking on the name plate of the VFD indicates that the VFD is CE-compliant, meeting the regulations of the European low-voltage directive (2014/35/EU) and EMC directive (2014/30/EU).

B.5.2 EMC compliance declaration

European union (EU) stipulates that the electric and electrical devices sold in Europe cannot generate electromagnetic disturbance that exceeds the limits stipulated in related standards, and can work properly in environments with certain electromagnetic interference. The EMC product standard (EN 61800-3) describes the EMC standards and specific test methods for adjustable speed electrical power drive systems. INVT products have strictly followed these EMC regulations.

B.6 EMC regulations

The EMC product standard (EN 61800-3) describes the EMC requirements on VFDs.

Application environment categories

Category I: Civilian environments, including application scenarios where VFDs are directly connected to the civil power supply low-voltage grids without intermediate transformers

Category II: All environments except those in Category I.

VFD categories

C1: Rated voltage lower than 1000 V, applied to environments of Category I.

C2: Rated voltage lower than 1000 V, non-plug, socket, or mobile devices; power drive systems that must be installed and operated by specialized personnel when applied to environments of Category I

Note: The EMC standard IEC/EN 61800-3 no longer restricts the power distribution of VFDs, but it

specifies their use, installation, and commissioning. Specialized personnel or organizations must have the necessary skills (including the EMC-related knowledge) for installing and/or performing commissioning on the electrical drive systems.

C3: Rated voltage lower than 1000 V, applied to environments of Category II. They cannot be applied to environments of Category I.

C4: Rated voltage higher than 1000 V, or rated current higher or equal to 400 A, applied to complex systems in environments of Category II.

B.6.1 VFD category of C2

The induction disturbance limit meets the following stipulations:

1. Select an optional EMC filter according to "Optional peripheral accessories" and install it following the description in the EMC filter manual.
2. Select the motor and control cables according to the description in the manual.
3. Install the VFD according to the description in the manual.

	✧ Currently in environments in China, the VFD may generate radio interference, you need to take measures to reduce the interference.

B.6.2 VFD category of C3

The anti-interference performance of the VFD meets the requirements of environments Category II in the IEC/EN 61800-3 standard.

The induction disturbance limit meets the following stipulations:

1. Select an optional EMC filter according to "Optional peripheral accessories" and install it following the description in the EMC filter manual.
2. Select the motor and control cables according to the description in the manual.
3. Install the VFD according to the description in the manual.

	✧ VFDs of C3 category cannot be applied to civilian low-voltage common grids. When applied to such grids, the VFDs may generate radio frequency electromagnetic interference.

Appendix C Dimension drawings

C.1 What this chapter contains

This chapter describes the dimension drawings of the VFD. The dimension unit used in the drawings is mm.

C.2 Keypad structure

C.2.1 Structure diagram

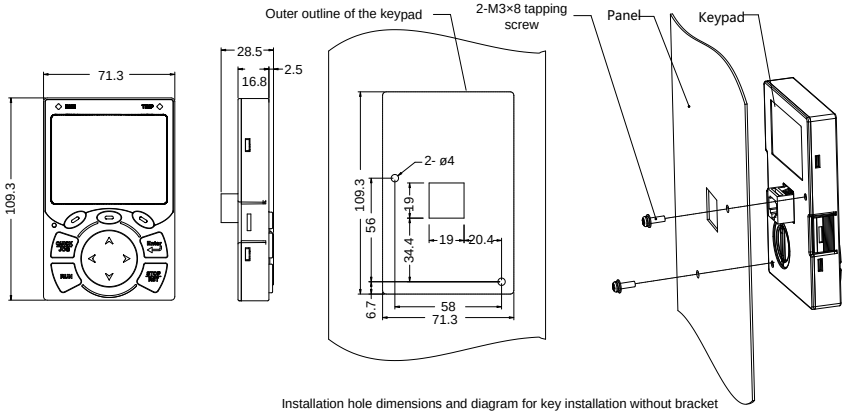

Figure C–1 Keypad structure diagram

C.2.2 Keypad installation bracket

Note: When installing an external keypad, you can directly use threaded screws or a keypad bracket. For VFD models of 1R5G/2R2P–075G/090P, you need to use optional keypad installation brackets. For those of 090G/110P–500G, you can use optional brackets or use the standard keypad brackets externally.

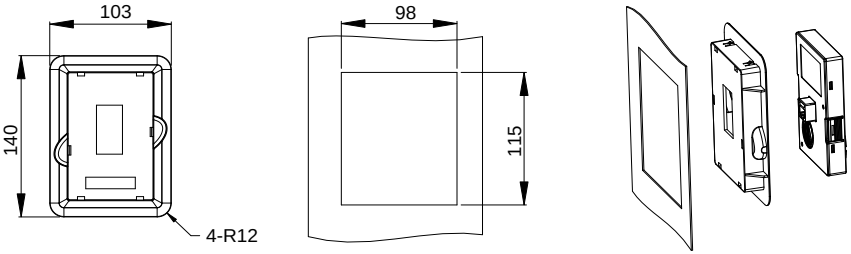

Figure C–2 1R5G/2R2P–500G keypad installation bracket (optional)

C.3 VFD structure

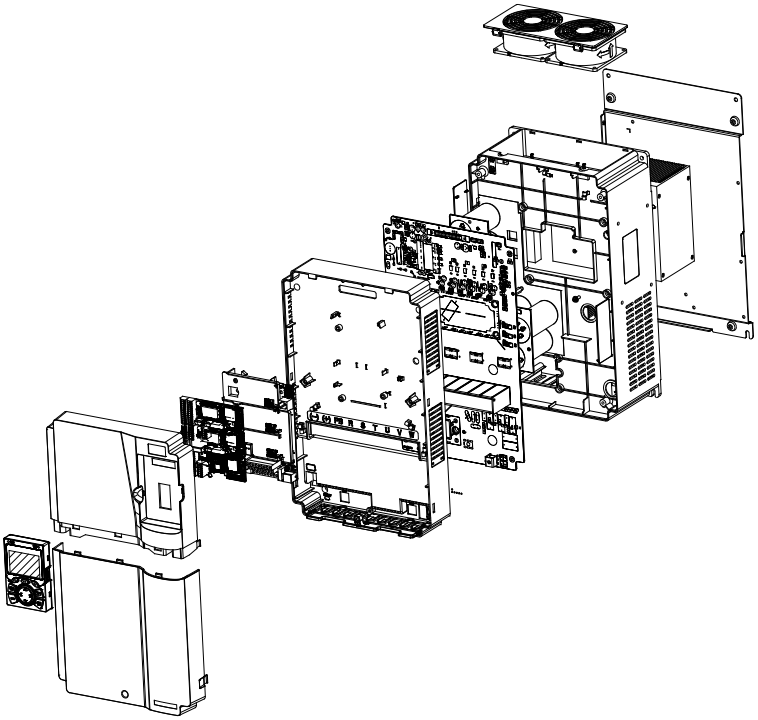

Figure C–3 VFD structure diagram

C.4 VFD structure

C.4.1 Wall-mounting dimensions

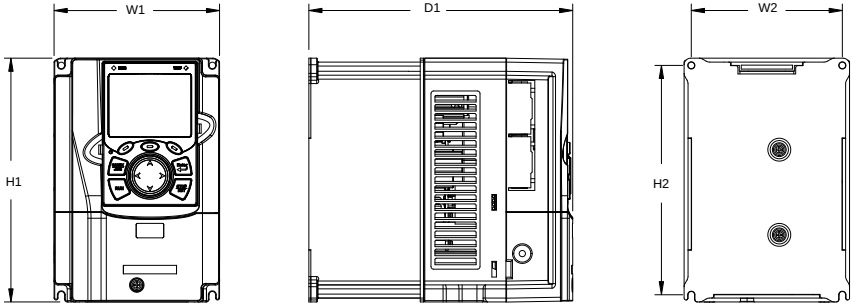

Figure C–4 1R5G/2R2P–037G/045P wall-mounting diagram

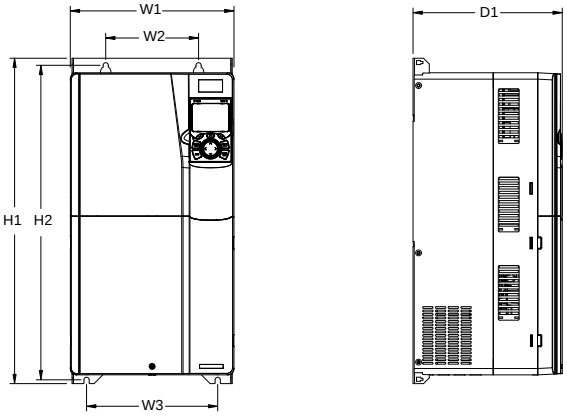

Figure C–5 045G/055P-075G/090P wall-mounting diagram

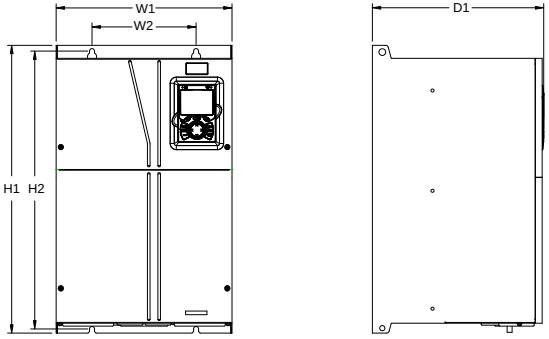

Figure C–6 090G/110P-110G/132P wall-mounting diagram

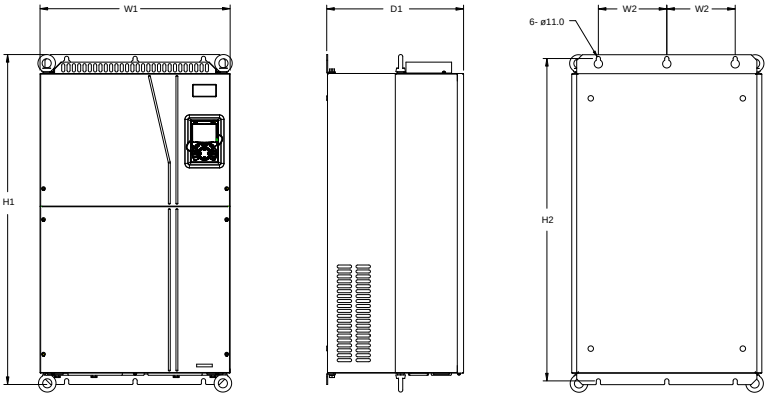

Figure C–7 132G/160P-200G/220P wall-mounting diagram

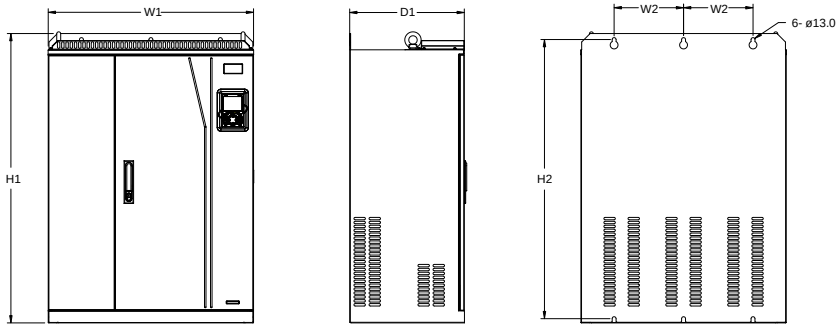

Figure C–8 220G/250P-315G/350P wall-mounting diagram

Table C–1 Wall-mounting dimensions (unit: mm)

VFD model	W1	W2	W3	H1	H2	D1	Installation hole diameter	Screw
1R5G/2R2P–2R2G/003P	126	115	-	186	175	185	Ø 5	M4
004G/5R5P–5R5G/7R5P	126	115	-	186	175	201	Ø 5	M4
7R5G/011P	146	131	-	256	243.5	192	Ø 6	M5
011G/015P–015G/018P	170	151	-	320	303.5	220	Ø 6	M5
018G/022P–022G/030P	200	185	-	340.6	328.6	208	Ø 6	M5
030G/037P–037G/045P	250	230	-	400	380	223	Ø 6	M5
045G/055P–075G/090P	282	160	226	560	542	258	Ø 9	M8
090G/110P–110G/132P	338	200	-	554	535	330	Ø 10	M8
132G/160P–200G/220P	500	180	-	870	850	360	Ø 11	M10
220G/250P–315G/355P	680	230	-	960	926	380	Ø 13	M12

C.4.2 Flange installation dimensions

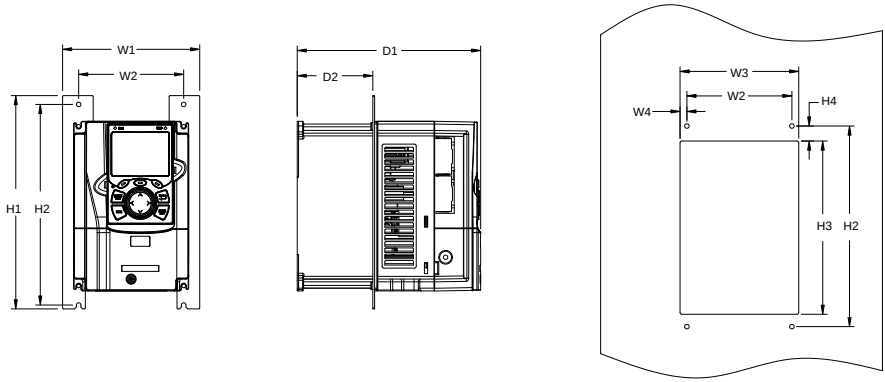

Figure C–9 1R5G/2R2P-075G/090P flange installation diagram

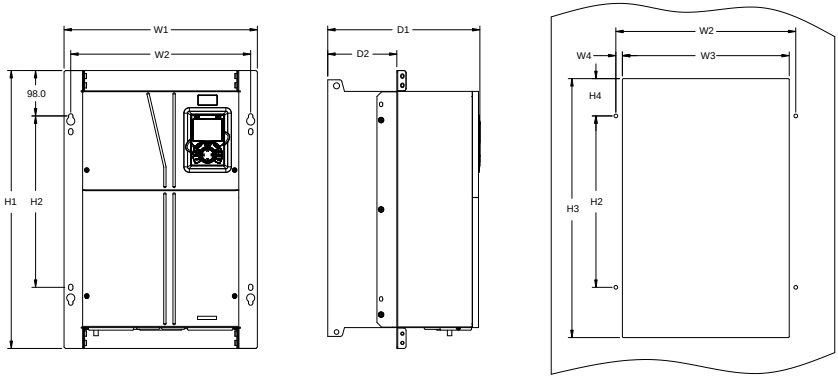

Figure C–10 090G/110P-110G/132P flange installation diagram

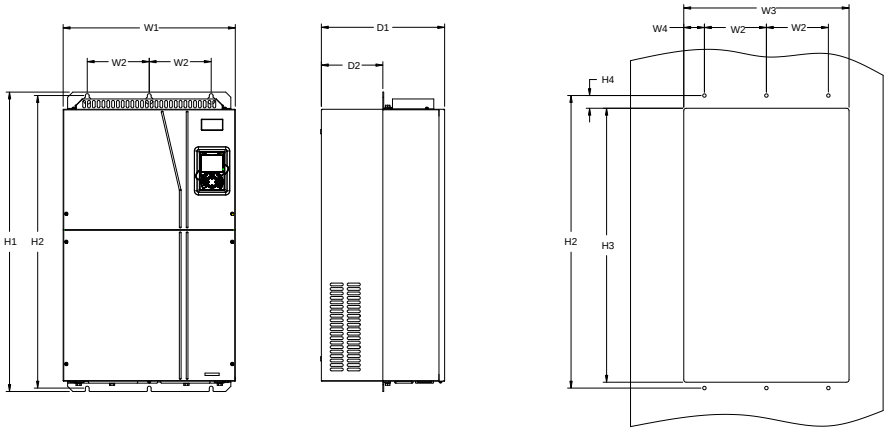

Figure C–11 132G/160P-200G/220P flange installation diagram

Table C–2 380V flange installation dimensions (unit: mm)

VFD model	W1	W2	W3	W4	H1	H2	H3	H4	D1	D2	Hole diameter	Screw
1R5G/2R2P–2R2G/003P	150.2	115	130	7.5	234	220	190	13.5	185	65.5	Ø 5	M4
004G/5R5P–5R5G/7R5P	150.2	115	130	7.5	234	220	190	13.5	201	83	Ø 5	M4
7R5G/011P	170.2	131	150	9.5	292	276	260	6	192	84.5	Ø 6	M5
011G/015P–015G/018P	191.2	151	174	11.5	370	351	324	12	220	113	Ø 6	M5
018G/022P–022G/030P	266	250	224	13	371	250	350.6	20.3	208	104	Ø 6	M5
030G/037P–037G/045P	316	300	274	13	430	300	410	55	223	118.3	Ø 6	M5
045G/055P–075G/090P	352	332	306	12	580	400	570	80	258	133.8	Ø 9	M8
090G/110P–110G/132P	418.5	389.5	361	14.2	600	370	559	108.5	330	149.5	Ø 10	M8
132G/160P–200G/220P	500	180	480	60	870	850	796	37	360	178.5	Ø 11	M10

C.4.3 Floor installation dimensions

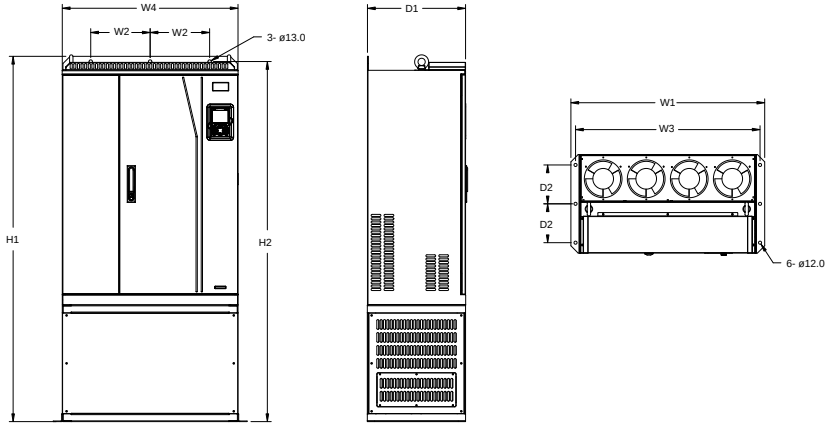

Figure C–12 220G/250P–315G/355P floor installation diagram

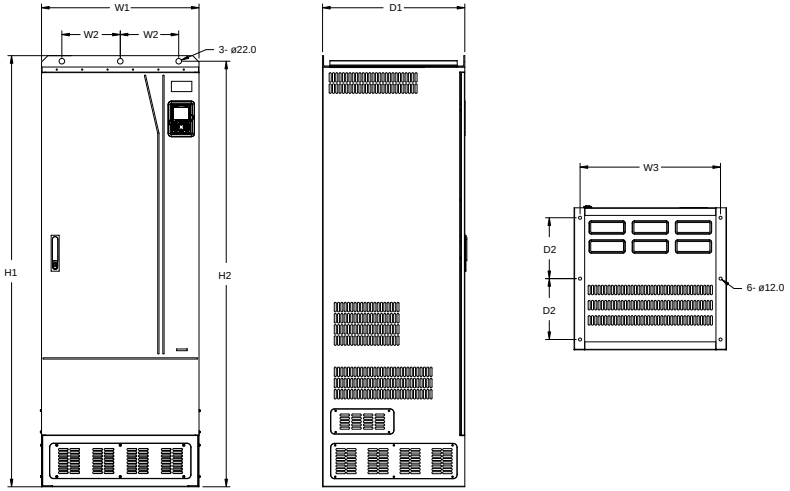

Figure C–13 355G/400P-500G floor installation diagram

Table C–3 380V floor installation dimensions (unit: mm)

VFD model	W1	W2	W3	W4	H1	H2	D1	D2	Hole diameter	Screw
220G/250P–315G/355P	750	230	714	680	1410	1390	380	150	Ø 13/12	M12/M10
355G/400P-500G	620	230	572	-	1700	1678	560	240	Ø 22/12	M20/M10

Appendix D Optional peripheral accessories

D.1 What this chapter contains

This chapter describes how to select optional accessories of the VFD.

D.2 Wiring of peripheral accessories

The following figure shows the external wiring of the VFD.

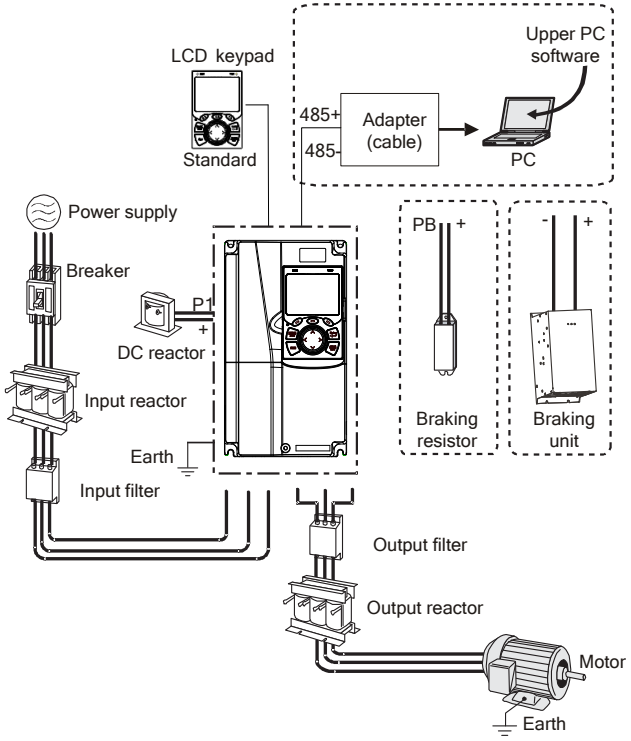

Note:

- The VFD models of 037G/045P and lower are equipped with built-in braking units, and those of 045G/055P–055G/075P can be configured with optional built-in braking units.
- The VFD models of 018G/022P–110G/132P are equipped with built-in DC reactors.
- P1 terminals are equipped only for the VFD models of 132G/160P and higher, which enable the VFD models to be directly connected to external DC reactors.
- The braking units are INVT DBU series standard braking units. For details, see the DBU operation manual.

Image	Name	Description
	Cable	Accessory for signal transmission
	Breaker	Device for electric shock prevention and protection against short-to-ground that may cause current leakage and fire. Select residual-current circuit breakers (RCCBs) that are applicable to VFDs and can restrict high-order harmonics, and of which the rated sensitive current for one VFD is larger than 30 mA.
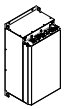	Passive harmonic filters	Device used to reduce the current distortion rate and harmonic content, thereby improving the power factor.
	Input reactor	Accessories used to improve the current adjustment coefficient on the input side of the VFD, and thus restrict high-order harmonic currents. The VFD models of 132G/160P and higher can be directly connected to external DC reactors.
	Input filter	Accessory that restricts the electromagnetic interference generated by the VFD and transmitted to the public grid through the power cable. Try to install the input filter near the input terminal side of the VFD.
	DC reactor	Models 132G/160P and higher models can be directly connected to external DC reactors. DC reactors can improve the power factor, avoid damage to bridge rectifiers caused due to large input current of the VFD when large-capacity transformers are connected, and also avoid damage to the rectification circuit caused due to harmonics generated by grid voltage transients or phase-control loads.
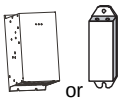 or	Braking unit or braking resistor	Accessories used to consume the regenerative energy of the motor to reduce the DEC time. The VFD models of 037G/045P and lower need only to be configured with braking resistors, those of 132G/160P and higher also need to be configured with braking units, and those of 045G/055P-055G/075P can be configured with optional built-in braking units.

Image	Name	Description
	Output filter	Accessory used to restrict interference generated in the wiring area on the output side of the VFD. Try to install the output filter near the output terminal side of the VFD.
	Output reactor	Accessory used to lengthen the valid transmission distance of the VFD, which effectively restrict the transient high voltage generated during the switch-on and switch-off of the IGBT module of the VFD.
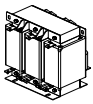	dv/dt decrement filters	Device used to suppress voltage spikes, reduce traveling waves in long cables, and reflect dv/dt transient voltages, thereby reducing motor eddy current losses and noise, and providing motor insulation protection.
	Sine filters	Device used to suppress and absorb high-order harmonic currents derived from switching frequency ripple currents, correcting the waveform to approximate a sine wave, significantly extending the length of the output cable, reducing motor eddy current losses and noise, and protecting motor insulation.

D.3 Power supply

See section 1.4 Safety guidelines.

	✧ Ensure that the voltage class of the VFD is consistent with that of the grid.

D.4 Cables

D.4.1 Power cables

The sizes of the input power cables and motor cables must meet the local regulation.

- The input power cables and motor cables must be able to carry the corresponding load currents.
- The maximum temperature margin of the motor cables in continuous operation cannot be lower than 70°C.
- The conductivity of the PE grounding conductor is the same as that of the phase conductor, that is, the cross-sectional areas are the same.
- For details about the EMC requirements, see Appendix B Technical data

To meet the EMC requirements stipulated in the CE standards, you must use symmetrical shielded

cables as motor cables (as shown in the following figure).

Four-core cables can be used as input cables, but symmetrical shielded cables are recommended. Compared with four-core cables, symmetrical shielded cables can reduce electromagnetic radiation as well as the current and loss of the motor cables.

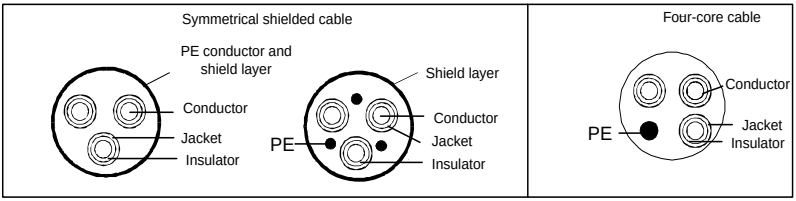

Note: If the conductivity of the shield layer of the motor cables cannot meet the requirements, separate PE conductors must be used.

To protect the conductors, the cross-sectional area of the shielded cables must be the same as that of the phase conductors if the cable and conductor are made of materials of the same type. This reduces grounding resistance, and thus improves impedance continuity.

To effectively restrict the emission and conduction of radio frequency (RF) interference, the conductivity of the shielded cable must at least be 1/10 of the conductivity of the phase conductor. This requirement can be well met by a copper or aluminum shield layer. The following figure shows the minimum requirement on motor cables of a VFD. The cable must consist of a layer of spiral-shaped copper strips. The denser the shield layer is, the more effectively the electromagnetic interference is restricted.

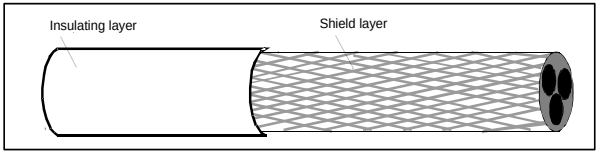

Cross-section of the cable

D.4.2 Control cables

All analog control cables and cables used for frequency input must be shielded cables. Analog signal cables need to be double-shielded twisted-pair cables (as shown in figure a). Use one separate shielded twisted pair for each signal. Do not use the same ground wire for different analog signals.

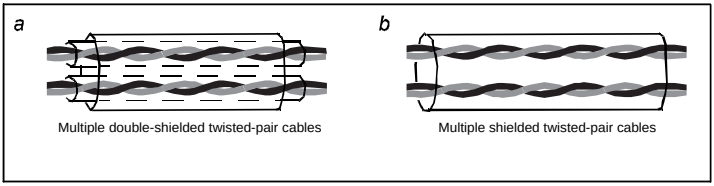

Power cable arrangement

For low-voltage digital signals, double-shielded cables are recommended, but shielded or unshielded twisted pairs (as shown in figure b) also can be used. For frequency signals, however, only shielded cables can be used.

Relay cables need to be those with metal braided shield layers.

Keypads need to be connected by using network cables. In complicated electromagnetic environments, shielded network cables are recommended.

Note: Analog signals and digital signals cannot use the same cables, and their cables must be arranged separately.

Do not perform any voltage endurance or insulation resistance tests, such as high-voltage insulation tests or using a megameter to measure the insulation resistance, on the VFD or its components. Insulation and voltage endurance tests have been performed between the main circuit and chassis of each VFD before delivery. In addition, voltage limiting circuits that can automatically cut off the test voltage are configured inside the VFDs.

Note: Check the insulation conditions of the input power cable of a VFD according to the local regulations before connecting it.

D.4.3 Recommended cable sizes

Table D–1 AC 3PH 380V(-15%)–440V(+10%)

VFD model	Recommended cable size (mm²)				Screw	
	R, S, T U, V, W	PE	P1 (+)	PB, (+), (-)	Terminal screw	Tightening torque (Nm)
GD350A-1R5G/2R2P-4	1.0/1.0	1.0/1.0	1.0/1.0	1.0/1.0	M4	1.2–1.5
GD350A-2R2G/003P-4	1.0/1.5	1.0/1.5	1.0/1.5	1.0/1.5	M4	1.2–1.5
GD350A-004G/5R5P-4	1.5/2.5	1.5/2.5	1.5/2.5	1.5/2.5	M4	1.2–1.5
GD350A-5R5G/7R5P-4	2.5/4	2.5/4	2.5/4	2.5/4	M4	1.2–1.5
GD350A-7R5G/011P-4	4/6	4/6	4/6	4/6	M4	1.2–1.5
GD350A-011G/015P-4	6/10	6/10	6/10	6/10	M5	2–2.5
GD350A-015G/018P-4	10/10	10/10	10/10	10/10	M5	2–2.5
GD350A-018G/022P-4	10/10	10/10	10/10	10/10	M5	2–2.5

VFD model	Recommended cable size (mm²)				Screw	
	R, S, T U, V, W	PE	P1 (+)	PB, (+), (-)	Terminal screw	Tightening torque (Nm)
GD350A-022G/030P-4	10/16	10/16	10/16	10/16	M6	4–6
GD350A-030G/037P-4	16/25	16/16	16/25	16/25	M6	4–6
GD350A-037G/045P-4	25/25	16/16	25/25	25/25	M6	4–6
GD350A-045G/055P-4	25/35	16/16	25/35	25/35	M8	9–11
GD350A-055G/075P-4	35/50	16/25	35/50	35/50	M8	9–11
GD350A-075G/090P-4	50/70	25/35	50/70	50/70	M8	9–11
GD350A-090G/110P-4	70/95	35/50	70/95	70/95	M12	31–40
GD350A-110G/132P-4	95/95	50/50	95/95	95/95	M12	31–40
GD350A-132G/160P-4	95/150	50/70	95/150	95/150	M12	31–40
GD350A-160G/185P-4	150/185	70/95	150/185	150/185	M12	31–40
GD350A-185G/200P-4	185/185	95/95	185/185	185/185	M12	31–40
GD350A-200G/220P-4	185/2×95	95/95	185/2×95	185/2×95	M12	31–40
GD350A-220G/250P-4	2×95/2×95	95/95	2×95/2×95	2×95/2×95	M12	31–40
GD350A-250G/280P-4	2×95/2×150	95/150	2×95/2×150	2×95/2×150	M12	31–40
GD350A-280G/315P-4	2×150/2×150	150/150	2×150/2×150	2×150/2×150	M12	31–40
GD350A-315G/355P-4	2×150/2×185	150/185	2×150/2×185	2×150/2×185	M12	31–40
GD350A-355G/400P-4	2×185/3×150	185/2×120	2×185/3×150	2×185/3×150	M12	31–40
GD350A-400G/450P-4	3×150	2×120/2×150	3×150	3×150	M12	31–40
GD350A-450G/500P-4	3×185	2×150/2×150	3×185	3×185	M12	31–40
GD350A-500G-4	3×185	2×150	3×185	3×185	M12	31–40

Note:

- Cables of the sizes recommended for the main circuit can be used in scenarios where the ambient temperature is lower than 40°C, the wiring distance is shorter than 100 m, and the current is the rated current.
- The terminals P1, (+), PB, and (-) are used to connect to DC reactors and brake accessories.

D.4.4 Cable arrangement

Motor cables must be arranged away from other cables. The motor cables of several VFDs can be arranged in parallel. It is recommended that you arrange the motor cables, input power cables, and control cables separately in different trays. The output dU/dt of the VFDs may increase electromagnetic interference on other cables. Do not arrange other cables and the motor cables in parallel.

If a control cable and power cable must cross each other, ensure that the angle between them is 90

degrees.

The cable trays must be connected properly and well grounded. Aluminum trays can implement local equipotential.

The following figure shows the cable arrangement distance requirements.

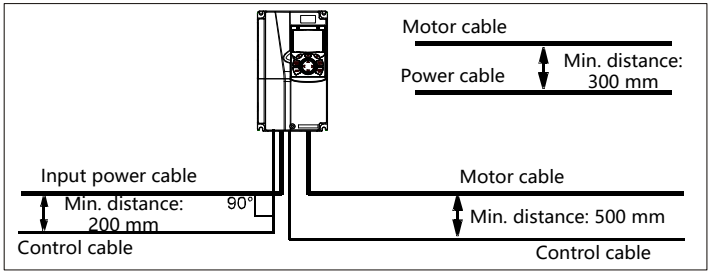

Cable arrangement distances

D.4.5 Insulation inspection

Check the motor and the insulation conditions of the motor cable before running the motor.

1. Ensure that the motor cable is connected to the motor, and then remove the motor cable from the U, V, and W output terminals of the VFD.
2. Use a megameter of 500 V DC to measure the insulation resistance between each phase conductor and the protection grounding conductor. For details about the insulation resistance of the motor, see the description provided by the manufacturer.

Note: The insulation resistance is reduced if it is damp inside the motor. If it may be damp, you need to dry the motor and then measure the insulation resistance again.

D.5 Breaker and electromagnetic contactor

The circuit breaker is mainly used to prevent electric shock accidents and short circuits to the ground that may cause leakage current fire. The electromagnetic contactor is mainly used to control the main circuit power on and off, which can effectively cut off the input power of the VFD in case of system failure to ensure safety.

	✧ According to the working principle and structure of breakers, if the manufacturer's regulation is not followed, hot ionized gases may escape from the breaker enclosure when a short-circuit occurs. To ensure safe use, exercise extra caution when installing and placing the breaker, and follow the manufacturer's instructions for operation.

Table D–2 AC 3PH 380V(-15%)–440V(+10%)

VFD model	Breaker rated current (A)	Quick fuse (A)	Contactor rated current (A)
GD350A-1R5G/2R2P-4	6/10	10/10	9/9

VFD model	Breaker rated current (A)	Quick fuse (A)	Contactor rated current (A)
GD350A-2R2G/003P-4	10/20	10/20	9/18
GD350A-004G/5R5P-4	20/25	20/35	18/25
GD350A-5R5G/7R5P-4	25/32	35/40	25/32
GD350A-7R5G/011P-4	32/50	40/50	32/38
GD350A-011G/015P-4	50/63	50/60	38/50
GD350A-015G/018P-4	63/63	60/70	50/65
GD350A-018G/022P-4	63/80	70/90	65/80
GD350A-022G/030P-4	80/100	90/125	80/80
GD350A-030G/037P-4	100/125	125/125	80/98
GD350A-037G/045P-4	125/140	125/150	98/115
GD350A-045G/055P-4	140/180	150/200	115/150
GD350A-055G/075P-4	180/225	200/250	150/185
GD350A-075G/090P-4	225/250	250/300	185/225
GD350A-090G/110P-4	250/315	300/350	225/265
GD350A-110G/132P-4	315/400	350/400	265/330
GD350A-132G/160P-4	400/500	400/500	330/400
GD350A-160G/185P-4	500/500	500/600	400/400
GD350A-185G/200P-4	500/630	600/600	400/500
GD350A-200G/220P-4	630/630	600/700	500/500
GD350A-220G/250P-4	630/700	700/800	500/630
GD350A-250G/280P-4	700/800	800/1000	630/630
GD350A-280G/315P-4	800/1000	1000/1000	630/800
GD350A-315G/355P-4	1000/1000	1000/1000	800/800
GD350A-355G/400P-4	1000/1000	1000/1200	800/1000
GD350A-400G/450P-4	1000/1250	1200/1200	1000/1000
GD350A-450G/500P-4	1250/1250	1200/1400	1000/1000
GD350A-500G-4	1250	1400	1000

Note: The accessory specifications described in the preceding table are ideal values. You can select accessories based on the actual market conditions, but try not to use those with lower values.

D.6 Harmonic filter

To enhance grid protection, reduce harmonic interference from the VFD to the grid, and improve input power factor, consider configuring external DC reactors, input reactors, or passive harmonic filters based on your specific application needs.

When the cable between the VFD and the motor is long, it is necessary to choose an external output reactor, dv/dt decrement filter, or sine wave filter according to the length of the motor cable to reduce excessive dv/dt, thereby reducing voltage stress on the motor winding, protecting the motor winding,

and extending the motor life. The following table describes the recommended output filters for motor cable lengths.

Table D–3 Output filter selection for motor cable lengths

Non-shielded cable length	50m–150m	150m–450m	450m–1000m
Shielded cable length	30m–100m	100m–230m	230m–500m
Output filter category	Output reactor (1%)	/	/
	/	dv/dt decrement filter	/
	/	/	Sine-wave filter

Table D–4 Reactor model selection

VFD power	Input reactor	Output reactor	DC reactor
1.5kW	GDL-ACL0005-4CU	GDL-OCL0005-4CU	/
2.2kW	GDL-ACL0006-4CU	GDL-OCL0006-4CU	/
3kW	GDL-ACL0014-4CU	GDL-OCL0010-4CU	/
4kW	GDL-ACL0014-4CU	GDL-OCL0010-4CU	/
5.5kW	GDL-ACL0020-4CU	GDL-OCL0014-4CU	/
7.5kW	GDL-ACL0025-4CU	GDL-OCL0020-4CU	/
11kW	GDL-ACL0035-4AL	GDL-OCL0025-4CU	/
15kW	GDL-ACL0040-4AL	GDL-OCL0035-4AL	/
18.5kW	GDL-ACL0051-4AL	GDL-OCL0040-4AL	Standard
22kW	GDL-ACL0051-4AL	GDL-OCL0050-4AL	Standard
30kW	GDL-ACL0070-4AL	GDL-OCL0060-4AL	Standard
37kW	GDL-ACL0090-4AL	GDL-OCL0075-4AL	Standard
45kW	GDL-ACL0110-4AL	GDL-OCL0092-4AL	Standard
55kW	GDL-ACL0150-4AL	GDL-OCL0115-4AL	Standard
75kW	GDL-ACL0150-4AL	GDL-OCL0150-4AL	Standard
90kW	GDL-ACL0220-4AL	GDL-OCL0220-4AL	Standard
110kW	GDL-ACL0220-4AL	GDL-OCL0220-4AL	Standard
132kW	GDL-ACL0265-4AL	GDL-OCL0265-4AL	GDL-DCL0300-4AL
160kW	GDL-ACL0330-4AL	GDL-OCL0330-4AL	GDL-DCL0365-4AL
185kW	GDL-ACL0390-4AL	GDL-OCL0400-4AL	GDL-DCL0455-4AL
200kW	GDL-ACL0390-4AL	GDL-OCL0400-4AL	GDL-DCL0455-4AL
220kW	GDL-ACL0450-4AL	GDL-OCL0450-4AL	GDL-DCL0505-4AL
250kW	GDL-ACL0500-4AL	GDL-OCL0500-4AL	GDL-DCL0550-4AL
280kW	GDL-ACL0500-4AL	GDL-OCL0560-4AL	GDL-DCL0675-4AL
315kW	GDL-ACL0580-4AL	GDL-OCL0660-4AL	GDL-DCL0675-4AL

VFD power	Input reactor	Output reactor	DC reactor
355kW	Standard	GDL-OCL0660-4AL	GDL-DCL0810-4AL
400kW	Standard	GDL-OCL0720-4AL	GDL-DCL0810-4AL
450kW	Standard	GDL-OCL0820-4AL	GDL-DCL1000-4AL
500kW	Standard	GDL-OCL1000-4AL	GDL-DCL1000-4AL

Note:

- The rated input voltage drop of input reactor is designed to ≥ 1.5%.
- The rated output voltage drop of output reactors is 1%.
- The preceding table describes external accessories. You need to specify the ones you choose when purchasing accessories.

Table D–5 Filter model selection

VFD power	Input filter	Output filter	
	Passive harmonic filter	dv/dt decrement filter	Sine-wave filter
1.5kW	GDL-H0006-4AL	GDL-DUL0005-4CU	GDL-OSF0005-4AL
2.2kW	GDL-H0006-4AL	GDL-DUL0005-4CU	GDL-OSF0005-4AL
3kW	GDL-H0014-4AL	GDL-DUL0010-4CU	GDL-OSF0010-4AL
4kW	GDL-H0014-4AL	GDL-DUL0010-4CU	GDL-OSF0010-4AL
5.5kW	GDL-H0020-4AL	GDL-DUL0014-4CU	GDL-OSF0014-4AL
7.5kW	GDL-H0025-4AL	GDL-DUL0020-4CU	GDL-OSF0020-4AL
11kW	GDL-H0032-4AL	GDL-DUL0025-4CU	GDL-OSF0025-4AL
15kW	GDL-H0040-4AL	GDL-DUL0032-4CU	GDL-OSF0032-4AL
18.5kW	GDL-H0047-4AL	GDL-DUL0040-4AL	GDL-OSF0040-4AL
22kW	GDL-H0056-4AL	GDL-DUL0045-4AL	GDL-OSF0045-4AL
30kW	GDL-H0070-4AL	GDL-DUL0060-4AL	GDL-OSF0060-4AL
37kW	GDL-H0080-4AL	GDL-DUL0075-4AL	GDL-OSF0075-4AL
45kW	GDL-H0100-4AL	GDL-DUL0100-4AL	GDL-OSF0095-4AL
55kW	GDL-H0130-4AL	GDL-DUL0120-4AL	GDL-OSF0120-4AL
75kW	GDL-H0160-4AL	GDL-DUL0150-4AL	GDL-OSF0150-4AL
90kW	GDL-H0190-4AL	GDL-DUL0180-4AL	GDL-OSF0180-4AL
110kW	GDL-H0225-4AL	GDL-DUL0220-4AL	GDL-OSF0220-4AL
132kW	GDL-H0265-4AL	GDL-DUL0260-4AL	GDL-OSF0260-4AL
160kW	GDL-H0320-4AL	GDL-DUL0320-4AL	GDL-OSF0320-4AL
185kW	GDL-H0400-4AL	GDL-DUL0400-4AL	GDL-OSF0400-4AL
200kW	GDL-H0400-4AL	GDL-DUL0400-4AL	GDL-OSF0400-4AL
220kW	GDL-H0485-4AL	GDL-DUL0480-4AL	GDL-OSF0480-4AL
250kW	GDL-H0485-4AL	GDL-DUL0480-4AL	GDL-OSF0480-4AL

VFD power	Input filter	Output filter	
	Passive harmonic filter	dv/dt decrement filter	Sine-wave filter
280kW	GDL-H0545-4AL	GDL-DUL0540-4AL	GDL-OSF0600-4AL
315kW	GDL-H0610-4AL	GDL-DUL0600-4AL	GDL-OSF0600-4AL
355kW	GDL-H0800-4AL	GDL-DUL0800-4AL	GDL-OSF0800-4AL
400kW	GDL-H0800-4AL	GDL-DUL0800-4AL	GDL-OSF0800-4AL
450kW	GDL-H1000-4AL	GDL-DUL1000-4AL	GDL-OSF1000-4AL
500kW	GDL-H1000-4AL	GDL-DUL1000-4AL	GDL-OSF1000-4AL

Note:

- The preceding table lists only external accessories. You need to specify whether external or built-in accessories are needed in your purchase order.
- For the selection of accessories with different material requirements than those listed above, please refer to the low-voltage VFD GDL series filter option brochure.

D.7 EMC filters

J10 is not connected in factory for VFD models of 110G/132P and lower. Connect the J10 packaged with the manual if the requirements of IEC/EN 61800-3 C3 need to be met;

J10 is connected in factory for VFDs of 132G/160P and higher, all of which meet the requirements of level C3.

Note:

Disconnect J10 in the following situations:

- The EMC filter is applicable to the neutral-grounded grid system. If it is used for the IT grid system (that is, non-neutral grounded grid system), disconnect J10.
- If leakage protection occurs during configuration of a residual-current circuit breaker, disconnect J10.

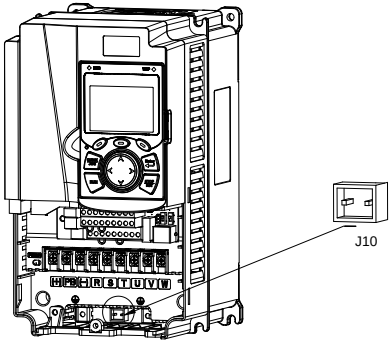

- Do not connect C3 filters in IT power systems.

FLT – P 04 045 L – B
A B C D E F

Field identifier	Field description
A	FLT: Name of the EMC filter series
B	Filter type P: Power input filter L: Output filter
C	Voltage class 04: AC 3PH 380V(-15%)–440V(+10%) 06: AC 3PH 520V(-15%)–690V(+10%)
D	3-digit code indicating the rated current. For example, 015 indicates 15 A.
E	EMC filter performance L: General H: High-performance
F	EMC filter application environment A: Environment Category I (IEC61800-3) category C1 (EN 61800-3) B: Environment Category I (IEC61800-3) category C2 (EN 61800-3) C: Environment Category II (IEC61800-3) category C3 (EN 61800-3)

Table D–6 EMC filter model selection

VFD model	Input filter		Output filter	
	G type	P type	G type	P type
GD350A-1R5G/2R2P-4	FLT-P04006L-B	FLT-P04006L-B	FLT-L04006L-B	FLT-L04006L-B
GD350A-2R2G/003P-4		FLT-P04016L-B		FLT-L04016L-B
GD350A-004G/5R5P-4	FLT-P04016L-B		FLT-L04016L-B	
GD350A-5R5G/7R5P-4		FLT-P04032L-B		FLT-L04032L-B
GD350A-7R5G/011P-4	FLT-P04032L-B		FLT-L04032L-B	
GD350A-011G/015P-4		FLT-P04045L-B		FLT-L04045L-B
GD350A-015G/018P-4	FLT-P04045L-B		FLT-L04045L-B	
GD350A-018G/022P-4		FLT-P04065L-B		FLT-L04065L-B
GD350A-022G/030P-4	FLT-P04065L-B		FLT-L04065L-B	
GD350A-030G/037P-4		FLT-P04100L-B		FLT-L04100L-B
GD350A-037G/045P-4	FLT-P04100L-B		FLT-L04100L-B	
GD350A-045G/055P-4		FLT-P04150L-B		FLT-L04150L-B
GD350A-055G/075P-4	FLT-P04150L-B		FLT-L04150L-B	
GD350A-075G/090P-4		FLT-P04240L-B		FLT-L04240L-B

<table>
<tr><th rowspan="2">VFD model</th><th colspan="2">Input filter</th><th colspan="2">Output filter</th></tr>
<tr><th>G type</th><th>P type</th><th>G type</th><th>P type</th></tr>
<tr><td>GD350A-090G/110P-4</td><td rowspan="3">FLT-P04240L-B</td><td rowspan="2"></td><td rowspan="3">FLT-L04240L-B</td><td rowspan="2"></td></tr>
<tr><td>GD350A-110G/132P-4</td></tr>
<tr><td>GD350A-132G/160P-4</td><td rowspan="3">FLT-P04400L-B</td><td rowspan="3">FLT-L04400L-B</td></tr>
<tr><td>GD350A-160G/185P-4</td><td rowspan="3">FLT-P04400L-B</td><td rowspan="3">FLT-L04400L-B</td></tr>
<tr><td>GD350A-185G/200P-4</td></tr>
<tr><td>GD350A-200G/220P-4</td><td rowspan="3">FLT-P04600L-B</td><td rowspan="3">FLT-L04600L-B</td></tr>
<tr><td>GD350A-220G/250P-4</td><td rowspan="3">FLT-P04600L-B</td><td rowspan="3">FLT-L04600L-B</td></tr>
<tr><td>GD350A-250G/280P-4</td></tr>
<tr><td>GD350A-280G/315P-4</td><td rowspan="3">FLT-P04800L-B</td><td rowspan="3">FLT-L04800L-B</td></tr>
<tr><td>GD350A-315G/355P-4</td><td rowspan="3">FLT-P04800L-B</td><td rowspan="3">FLT-L04800L-B</td></tr>
<tr><td>GD350A-355G/400P-4</td></tr>
<tr><td>GD350A-400G/450P-4</td><td rowspan="2">FLT-P041000L-B</td><td rowspan="2">FLT-L041000L-B</td></tr>
<tr><td>GD350A-450G/500P-4</td><td rowspan="2">FLT-P041000L-B</td><td rowspan="2">FLT-L041000L-B</td></tr>
<tr><td>GD350A-500G-4</td><td>/</td><td>/</td></tr>
</table>

Note:

- The input EMI meets the C2 requirements after an input filter is configured.
- The preceding table describes external accessories. You need to specify the ones you choose when purchasing accessories.

D.8 Braking system

D.8.1 Brake component selection

When the VFD driving a high-inertia load decelerates or needs to decelerate abruptly, the motor runs in the power generation state and transmits the load-carrying energy to the DC circuit of the VFD, causing the bus voltage of the VFD to rise. If the bus voltage exceeds a specific value, the VFD reports an overvoltage fault. To prevent this from happening, you need to configure brake components.

<table>
<tr><td></td><td>✧ The design, installation, commissioning, and operation of the device must be performed by trained and qualified professionals.
✧ Follow all the "Warning" instructions during the operation. Otherwise, major physical injuries or property loss may be caused.
✧ Only qualified electricians are allowed to perform the wiring. Otherwise, damage to the VFD or brake components may be caused.
✧ Read the braking resistor or unit instructions carefully before connecting them to the VFD.
✧ Connect braking resistors only to the terminals PB and (+), and braking units</td></tr>
</table>

	only to the terminals (+) and (-). Do not connect them to other terminals. Otherwise, damage to the brake circuit and VFD and fire may be caused.
	✧ Connect the brake components to the VFD according to the wiring diagram. If the wiring is not properly performed, damage to the VFD or other devices may be caused.

The VFD models of 037G/045P and lower are equipped with built-in braking units, and those of 045G/055P and higher need to be configured with external braking units. The VFD models of 045G/055P–055G/075P can be configured with optional built-in braking units, and after a built-in braking unit is configured, the VFD model code is added with a suffix "-B", for example, GD350A-045G/055P-4-B. Select braking resistors according to the specific requirements (such as the brake torque and brake usage requirements) on site.

Table D–7 Braking units for AC 3PH 380V(-15%)–440V(+10%)

VFD model	Braking unit model	Resistance applicable for 100% brake torque (Ω)	Dissipated power of braking resistor (kW)			Min. allowable brake resistance (Ω)
			10% braking ratio	50% braking ratio	80% braking ratio	
GD350A-1R5G/2R2P-4	Built-in braking unit	326	0.23	1.1	1.8	170
GD350A-2R2G/003P-4		222	0.33	1.7	2.6	130
GD350A-004G/5R5P-4		122	0.6	3	4.8	80
GD350A-5R5G/7R5P-4		89	0.75	4.1	6.6	60
GD350A-7R5G/011P-4		65	1.1	5.6	9	47
GD350A-011G/015P-4		44	1.7	8.3	13.2	31
GD350A-015G/018P-4		32	2	11	18	23
GD350A-018G/022P-4		27	3	14	22	19
GD350A-022G/030P-4		22	3	17	26	17
GD350A-030G/037P-4		17	5	23	36	17
GD350A-037G/045P-4		13	6	28	44	11.7
GD350A-045G/055P-4	DBU100H-110-4	10	7	34	54	6.4
GD350A-055G/075P-4		8	8	41	66	
GD350A-075G/090P-4		6.5	11	56	90	
GD350A-090G/110P-4	DBU100H-160-4	5.4	14	68	108	4.4
GD350A-110G/132P-4		4.5	17	83	132	
GD350A-132G/160P-4	DBU100H-220-4	3.7	20	99	158	3.2
GD350A-160G/185P-4	DBU100H-320-4	3.1	24	120	192	2.2
GD350A-185G/200P-4		2.8	28	139	222	
GD350A-200G/220P-4		2.5	30	150	240	

VFD model	Braking unit model	Resistance applicable for 100% brake torque (Ω)	Dissipated power of braking resistor (kW)			Min. allowable brake resistance (Ω)
			10% braking ratio	50% braking ratio	80% braking ratio	
GD350A-220G/250P-4	DBU100H-400-4	2.2	33	165	264	1.8
GD350A-250G/280P-4		2.0	38	188	300	
GD350A-280G/315P-4	Two sets DBU100H-320-4	3.6*2	21*2	105*2	168*2	2.2*2
GD350A-315G/355P-4		3.2*2	24*2	118*2	189*2	
GD350A-355G/400P-4		2.8*2	27*2	132*2	210*2	
GD350A-400G/450P-4		2.4*2	30*2	150*2	240*2	
GD350A-450G/500P-4	Two sets DBU100H-400-4	2.2*2	34*2	168*2	270*2	1.8*2
GD350A-500G-4		2.0*2	38*2	186*2	300*2	

Note:

- Select braking resistors according to the resistance and power data provided by our company.
- The braking resistor may increase the brake torque of the VFD. The preceding table describes the resistance and power for 100% brake torque, 10% braking ratio, 50% braking ratio, and 80% braking ratio. You can select the braking system based on the actual operation conditions.
- When using an external braking unit, set the brake voltage class of the braking unit properly by referring to the manual of the DBU100H dynamic braking unit. If the voltage class is set incorrectly, the VFD may not run properly.

	✧ Do not use braking resistors whose resistance is lower than the specified minimum resistance. The VFD does not provide protection against overcurrent caused by resistors with low resistance.
	✧ In scenarios where brake is frequently implemented, that is, the brake usage is greater than 10%, you need to select a braking resistor with higher power as required by the operation conditions according to the preceding table.

D.8.2 Braking resistor cable selection

Braking resistor cables need to be shielded cables.

D.8.3 Braking resistor installation

All resistors need to be installed in places with good cooling conditions.

	✧ The materials near the braking resistor or braking unit must be non-flammable. The surface temperature of the resistor is high. Air flowing from the resistor is of hundreds of degrees Celsius. Prevent any materials from coming into contact with the resistor.

Installation of braking resistors

	✧ The VFD models of 037G/045P and lower need only external braking resistors. ✧ PB and (+) are the terminals for connecting braking resistors.

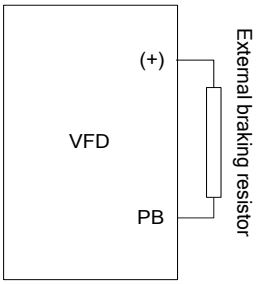

Installation of braking units:

	✧ (+) and (-) are the terminals for connecting braking units. ✧ The connection cables between the (+) and (-) terminals of the VFD and those of a braking unit must be shorter than 5 m, and the connection cables between the BR1 and BR2 terminals of a braking unit and the terminals of a braking resistor must be shorter than 10 m.

The following figure shows the connection of one VFD to a dynamic braking unit.

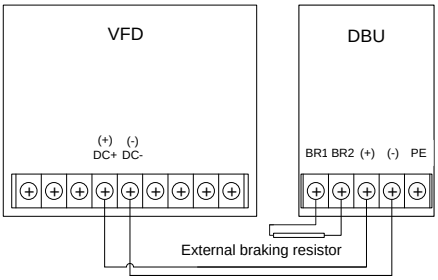

Appendix E STO function description

Reference standards: IEC 61508-1, IEC 61508-2, IEC 61508-3, IEC 61508-4, IEC 62061, ISO 13849-1, IEC 61800-5-2

You can enable the safe torque off (STO) function to prevent unexpected startups when the main power supply of the drive is not switched off. The STO function switches off the drive output by turning off the drive signals to prevent unexpected startups of the motor (see the following figure). After the STO function is enabled, you can perform some-time operations (such as non-electrical cleaning in the lathe industry) and maintain the non-electrical components of the device without switching off the drive.

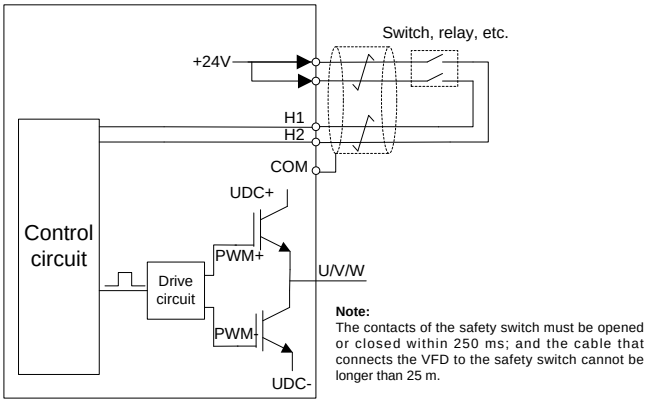

E.1 STO function logic

The following table describes the input states and corresponding faults of the STO function.

STO input state	Corresponding fault
H1 and H2 opened simultaneously	The STO function is triggered, and the drive stops running. Fault code: 40: Safe torque off (STO)
H1 and H2 closed simultaneously	The STOP function is not triggered, and the drive runs properly.
One of H1 and H2 opened, and the other closed	The STL1, STL2, or STL3 fault occurs. Fault code: 41: Channel H1 exception (STL1) 42: Channel H2 exception (STL2) 43: Channel H1 and H2 exceptions (STL3)

E.2 STO channel delay description

The following table describes the trigger and indication delay of the STO channels.

STO mode	STO trigger and indication delay[1, 2]
STO fault: STL1	Trigger delay < 10 ms Indication delay < 280 ms
STO fault: STL2	Trigger delay < 10 ms Indication delay < 280 ms
STO fault: STL3	Trigger delay < 10 ms Indication delay < 280 ms
STO fault: STO	Trigger delay < 10 ms Indication delay < 100 ms

1. STO function trigger delay: Time interval between trigger the STO function and switching off the drive output
2. STO indication delay: Time interval between trigger the STO function and STO output state indication

E.3 STO function installation checklist

Before installing the STO, check the items described in the following table to ensure that the STO function can be properly used.

	Item
☐	Ensure that the drive can be run or stopped randomly during commissioning.
☐	Stop the drive (if it is running), disconnect the input power supply, and isolate the drive from the power cable through the switch.
☐	Check the STO circuit connection according to the circuit diagram.
☐	Check whether the shielding layer of the STO input cable is connected to the +24 V reference ground COM.
☐	Connect the power supply.
☐	Test the STO function as follows after the motor stops running: • If the drive is running, send a stop command to it and wait until the shaft of the motor stops rotating. • Activate the STO circuit and send a start command to the drive. Ensure that the motor does not start. • Deactivate the STO circuit.
☐	Restart the drive, and check whether the motor is running properly.
☐	Test the STO function as follows when the motor is running: • Start the drive. Ensure that the motor is running properly. • Activate the STO circuit. • The drive reports an STO fault (for details, see 5.5.19 Fault handling). Ensure that the motor coasts to stop rotating. • Deactivate the STO circuit.
☐	Restart the drive, and check whether the motor is running properly.

Appendix F Energy efficiency data

Table F–1 Power loss and IE class

Model	Relative loss (%)								Stand by loss (W)	IE class
	(0;25)	(0;50)	(0;100)	(50;25)	(50;50)	(50;100)	(90;50)	(90;100)		
GD350A-1R5G/2R2P-4	1.54	1.50	1.67	1.12	1.04	1.45	0.91	1.45	3	IE2
GD350A-2R2G/003P-4	2.21	2.58	3.22	2.37	2.73	3.46	2.76	3.34	5	IE2
GD350A-004G/5R5P-4	1.13	1.40	2.05	1.14	1.43	2.14	1.41	2.28	6	IE2
GD350A-5R5G/7R5P-4	1.09	1.47	2.43	1.12	1.53	2.56	1.52	2.64	11	IE2
GD350A-7R5G/011P-4	1.06	1.37	2.06	1.11	1.45	2.45	1.46	2.69	7	IE2
GD350A-011G/015P-4	0.61	0.84	1.55	0.61	1.04	1.97	0.99	2.16	9	IE2
GD350A-015G/018P-4	0.42	0.52	1.27	0.55	0.73	1.46	0.78	1.66	9	IE2
GD350A-018G/022P-4	0.54	0.74	1.22	0.77	1.03	1.70	0.96	1.65	11	IE2
GD350A-022G/030P-4	0.47	0.67	1.21	0.67	0.90	1.54	0.87	1.38	11	IE2
GD350A-030G/037P-4	0.53	0.71	1.24	0.72	0.90	1.45	0.85	1.50	13	IE2
GD350A-037G/045P-4	0.47	0.69	1.39	0.63	0.88	1.60	0.99	1.72	14	IE2
GD350A-045G/055P-4	0.49	0.69	1.39	0.78	1.00	1.64	0.97	1.66	21	IE2
GD350A-055G/075P-4	0.51	0.69	1.26	0.71	0.89	1.47	0.88	1.40	22	IE2
GD350A-075G/090P-4	0.44	0.61	1.12	0.51	0.69	1.29	0.76	1.42	22	IE2
GD350A-090G/110P-4	0.42	0.59	1.15	0.47	0.65	1.29	0.90	1.48	25	IE2
GD350A-110G/132P-4	0.43	0.63	1.30	0.48	0.75	1.64	0.80	1.78	28	IE2
GD350A-132G/160P-4	0.47	0.59	1.06	0.61	0.71	1.28	0.85	1.43	55	IE2
GD350A-160G/185P-4	0.59	0.71	1.36	1.22	0.97	1.87	1.00	1.84	55	IE2
GD350A-185G/200P-4	0.63	0.76	1.21	1.17	1.12	1.70	1.08	1.61	55	IE2
GD350A-200G/220P-4	0.53	0.71	1.42	0.74	0.94	1.81	1.00	1.84	55	IE2
GD350A-220G/250P-4	0.33	0.42	0.69	0.85	0.95	1.33	1.10	1.18	80	IE2
GD350A-250G/280P-4	0.38	0.59	1.22	0.65	0.92	1.67	0.93	1.74	80	IE2
GD350A-280G/315P-4	0.40	0.59	1.10	0.64	0.89	1.58	1.12	1.35	80	IE2
GD350A-315G/355P-4	0.56	0.35	0.79	0.94	0.94	1.63	1.36	2.22	80	IE2
GD350A-355G/400P-4	0.37	0.47	0.98	0.91	1.11	1.95	1.42	2.44	80	IE2
GD350A-400G/450P-4	0.17	0.26	0.42	0.28	0.41	0.74	0.47	0.92	80	IE2
GD350A-450G/500P-4	0.31	0.54	0.98	0.46	0.62	1.02	0.67	0.85	80	IE2
GD350A-500G-4	0.32	0.55	0.98	0.45	0.61	1.02	0.66	0.83	80	IE2

Table F–2 Rated specifications

Model	Apparent power (kVA)	Rated output power (kW)	Rated output current (A)	Max. working temperature (°C)	Rated power frequency (Hz)	Rated power voltage (V)
GD350A-1R5G/2R2P-4	2.4	1.5	3.7	50°C Derate by 1% for every increase of 1°C when the temperature exceeds 40°C.	50Hz/60Hz Allowed range: 47–63Hz	3PH 380V
GD350A-2R2G/003P-4	3.2	2.2	5			
GD350A-004G/5R5P-4	6.2	4	9.5			
GD350A-5R5G/7R5P-4	9.2	5.5	14			
GD350A-7R5G/011P-4	12.1	7.5	18.5			
GD350A-011G/015P-4	16.4	11	25			
GD350A-015G/018P-4	21.0	15	32			
GD350A-018G/022P-4	25.0	18.5	38			
GD350A-022G/030P-4	29.6	22	45			
GD350A-030G/037P-4	39.4	30	60			
GD350A-037G/045P-4	49.3	37	75			
GD350A-045G/055P-4	60.5	45	92			
GD350A-055G/075P-4	75.6	55	115			
GD350A-075G/090P-4	98.7	75	150			
GD350A-090G/110P-4	118.4	90	180			
GD350A-110G/132P-4	141.5	110	215			
GD350A-132G/160P-4	171.1	132	260			
GD350A-160G/185P-4	200.7	160	305			
GD350A-185G/200P-4	223.7	185	340			
GD350A-200G/220P-4	250.1	200	380			
GD350A-220G/250P-4	279.7	220	425			
GD350A-250G/280P-4	315.9	250	480			
GD350A-280G/315P-4	348.8	280	530			
GD350A-315G/355P-4	394.9	315	600			
GD350A-355G/400P-4	427.8	355	650			
GD350A-400G/450P-4	473.8	400	720			
GD350A-450G/500P-4	539.7	450	820			
GD350A-500G-4	566.0	500	860			

Appendix G Further information

G.1 Product and service queries

Should you have any queries about the product, contact the local INVT office. Provide the model and serial number of the product you query about. You can visit www.invt.com to find a list of INVT offices.

G.2 Feedback on INVT VFD manuals

Your comments on our manuals are welcome. Visit www.invt.com, directly contact online service personnel or choose **Contact Us** to obtain contact information.

G.3 Documents on the Internet

You can find manuals and other product documents in the PDF format on the Internet. Visit www.invt.com and choose **Support** > **Download**.

E-mail: overseas@invt.com.cn Website: www.invt.com

The products are owned by **Shenzhen INVT Electric Co.,Ltd.**
Two companies are commissioned to manufacture: (For product code, refer to the 2nd/3rd place of S/N on the name plate.)

Shenzhen INVT Electric Co., Ltd. (origin code: 01)
Address: INVT Guangming Technology Building, Songbai Road, Matian, Guangming District, Shenzhen, China

INVT Power Electronics (Suzhou) Co., Ltd. (origin code: 06)
Address: 1# Kunlun Mountain Road, Science&Technology Town, Gaoxin District, Suzhou, Jiangsu, China

Industrial Automation: ■HMI ■PLC ■VFD ■Servo System ■Elevator Intelligent Control System ■Rail Transit Traction System

Energy & Power: ■UPS ■DCIM ■Solar Inverter ■SVG ■New Energy Vehicle Powertrain System ■New Energy Vehicle Charging System ■New Energy Vehicle Motor

66001-00699

INVT Copyright.
Information may be subject to change without notice during product improving.

202503 (V1.3)